CHAPTER 1

GENERAL

CHAPTER 1

GENERAL (Continued)

CHAPTER 1

GENERAL

1.000 Introduction

The R44 Maintenance Manual contains instructions necessary for proper maintenance, servicing, and handling of R44-series helicopters. The R44 Instructions for Continued Airworthiness (ICA) includes the R44 Maintenance Manual (MM), R44 Illustrated Parts Catalog (IPC), R44 Service Bulletins (SBs), R44 Service Letters (SLs), Lycoming O-540-series and IO-540-series Operator's Manuals, applicable Lycoming technical publications, and applicable component manufacturer technical publications.

Service Bulletins are issued by Robinson Helicopter Company (RHC), Lycoming, and component manufacturers. RHC Service Bulletin compliance is mandatory; comply with other applicable Service Bulletins as directed. RHC technical publications are available online at www.robinsonheli.com. Recent technical publications are available from Lycoming at www.lycoming.com, and from Continental Motors, Inc. (CMI) at www.continentalmotors.aero.

Kit instructions are issued for field installation of either optional or mandatory (due to Service Bulletin or parts obsolescence) equipment upgrades, or provisions for upgrades. Kit instruction issued by RHC either implement approved type design data, or are approved as type design data.

A list of chapters is located in the *Introduction*. Chapters are separated by tab dividers and chapter contents are listed in the chapter front pages.

CAUTION

Always read instructions completely before performing a task.

1.001 RHC Maintenance Manual and Illustrated Parts Catalog Updates

RHC Maintenance Manuals (MMs) and Illustrated Parts Catalogs (IPCs) are available digitally at www.robinsonheli.com, under the Publications tab. Access to these publications does not require an account and is free of charge.

Viewing MMs & IPCs online is recommended to ensure use of current data.

Viewing MMs & IPCs offline via paper or digital download requires verification that the data is current. Refer to the online MM or IPC Revision Log for the list of current pages.

Sign up for free email notification of revisions to MMs & IPCs by sending an email to subscriptions@robinsonheli.com with "Subscribe email" in the subject line. Within the email, include name, email address, physical address, and helicopter model(s) of interest.

1.002 R44 Maintenance Authorization

Only appropriately certificated mechanics who have successfully completed an R44 factory-sponsored maintenance course, or are under direct supervision of the above-stated mechanic, may perform maintenance, repairs, or inspections on R44-series helicopters. Annual inspections of U.S.-registered light helicopters must be performed by holders of an Inspection Authorization (IA) or by repair stations certificated by the Federal Aviation Administration (FAA). The daily preflight and some preventive maintenance may be performed by the above-stated mechanics, or by the pilot/owner after receiving appropriate instruction in accordance with the R44/R44 II/R44 Cadet Pilot's Operating Handbook and applicable aviation regulations.

1.003 Component Maintenance Authorization

Only appropriately certificated mechanics who have successfully completed both a factory-sponsored maintenance course and component maintenance course, and who possess technical data supplied by RHC, are authorized to perform maintenance specified in the Component Maintenance Manual (CMM). Component maintenance may only be performed at an RHC-authorized Service Center that has required Component Maintenance special tools (ref. R44 SL-67) and holds a Repair Station certificate (or foreign equivalent).

1.004 Maintenance Record

Blank, digital Airframe Maintenance Record forms are available online at www.robinsonheli.com.

Airframe Maintenance Record blank PDF forms may be used for R22-series, R44-series, and R66 Turbine helicopters. Component Record blank PDF forms may be used for life-limited or TBO components. Blank paper copies are available for purchase (P/N R8478 Airframe Maintenance Record and P/N R8479 Component Record [pack of 20]).

A Component Record is a maintenance record of the removals, installations, or maintenance performed on a life-limited or TBO component. When a life-limited or TBO component is installed in the helicopter, the Component Record card is inserted in the Airframe Maintenance Record. When a life-limited or TBO component is removed from the helicopter, remove the Component Record card and keep the card with the Component. Major assemblies may contain one or more life-limited or TBO component.

RHC encourages operators to utilize Component Record cards to assist in tracking time on interchangeable parts since service lives may be different between models.

RHC does not create Component Record cards for spares; however, operators may create their own.

RHCs Repair Station does not require a Component Record card in order to perform work on a component, unlike a Component/Return Authorization form.

RHC recommends using a toner-based laser, or a pigment-based inkjet, color printer and 65 lb white (96 bright) premium card stock for Maintenance Record or Component Record card production. Maintenance Record binders and tab sets are available separately (P/N R8656 Maintenance Record Binder and P/N R8650 Maintenance Record Tabs).

1.005 Notations

The following notations will be found throughout the manual:

NOTE

A NOTE provides emphasis or supplementary explanation.

CAUTION

Equipment damage can result if a **CAUTION** is not followed.

WARNING

Personal injury or death can result if a WARNING is not followed.

1.006 RHC Maintenance Manual and Illustrated Parts Catalog References

Maintenance Manual and Illustrated Parts Catalog Section and Figure references are subject to relocation and renumeration. Effort will be made at the time of RHC technical document revisions to correct superseded references, however, certain documents may not otherwise require revision and superseded references may remain. A keyword or part number search in online documents (Ctrl + F [PC] or Command + F [Mac]) may help to locate applicable data.

1.007 Definitions and Abbreviations

Refer to R44/R44 II/R44 Cadet Pilot's Operating Handbook (POH) Section 1, as applicable, for additional definitions and abbreviations.

A. Definitions

14 CFR § 27.602 Critical Part: C016-x main rotor blades & C029-x tail rotor blades are critical parts as defined by 14 CFR § 27.602 and are subject to special inspection requirements & reporting described in this manual. Contact RHC Technical Support if questions arise concerning special inspection or reporting requirements.

12 years: With respect to a 12 year inspection or life-limit, 12 years means 12 years from the date of the:

- factory-issued airworthiness certificate,
- factory-issued authorized release certificate (FAA Form 8130-3, Airworthiness Approval Tag), or
- last 12-year inspection.

Annually: With respect to an annual inspection, annually means within the preceding 12 calendar months.

Datum: An imaginary vertical plane from which all horizontal measurements are taken for balance purposes with the aircraft in level flight attitude. Refer to § 16-20 for R44 datum location.

Empty Weight: Empty Weight includes the weight of the airframe, powerplant, required and installed equipment, fixed ballast, unusable fuel, and gearbox oil. Refer to R44-series Type Certificate Data Sheet (TCDS) in Chapter 3. Refer to Equipment List/Weight and Balance Data Sheet (RF 134) and Weight and Balance Record in R44/R44 II/R44 Cadet POH Section 6, as applicable, for installed equipment.

Life-Limited Part: Refer to Chapter 3. Any part for which a mandatory replacement limit is specified in the type design, the Instructions for Continued Airworthiness, or the maintenance manual.

Time in Service: With respect to maintenance time records, time in service means the time from the moment an aircraft leaves the surface of the earth until it touches it at the next point of landing.

1.007 Definitions and Abbreviations (continued)

B. Abbreviations

14 CFR:	Title 14 of the Code of Federal Regulations. The Federal Aviation Regulations (FARs) are part of the CFR.
AOG:	Aircraft on Ground
ATA-100:	Air Transport Association of America Specification No. 100
BL:	Butt Line Station locations
CO:	Carbon Monoxide
CRA:	Component Return/Authorization
ELT:	Emergency Locator Transmitter
EMU:	Engine Monitoring Unit
FS:	Fuselage Station locations
HID:	High Intensity Discharge
HS:	Horizontal Stabilizer Station locations
ICA:	Instructions for Continued Airworthiness
LBL:	Left Butt Line Station locations
LED:	Light Emitting Diode
LH:	Left-hand
LRU:	Line-Replaceable Unit
MRDS:	Main Rotor Drive Shaft
MRGB or MGB:	Main Rotor Gearbox or Main Gearbox
OEM:	Original Equipment Manufacturer
R44 IPC:	R44 Illustrated Parts Catalog
R44 MM:	R44 Maintenance Manual
R44 POH:	R44 Pilot's Operating Handbook
R44 II POH:	R44 II Pilot's Operating Handbook
R44 Cadet POH:	R44 Cadet Pilot's Operating Handbook
RBL:	Right Butt Line Station locations
RH:	Right-hand
RHC:	Robinson Helicopter Company
RS:	Rotor Station locations
SB:	Service Bulletin
SDS:	Safety Data Sheet
SL:	Service Letter
TBO:	Time Between Overhaul
TCDS:	Type Certificate Data Sheet
TRDS:	Tail Rotor Drive Shaft
TRGB or TGB:	Tail Rotor Gearbox or Tail Gearbox
TS:	Tailcone Station locations
TSN:	Time Since New
TSO:	Time Since Overhaul
WL:	Water Line Station locations

1.008 Service Information

A. Part Designation

RHC parts are designated with an alphanumeric part number beginning with letter “A”, “B”, “C”, etc., followed by three digits and a dash number.

A revision letter or letters follow(s) the stamped or ink-marked part number. Revision progression is A thru Z, followed by AA thru AZ, followed by BA thru BZ, etc. Unless otherwise specified, any revision of the same part number is interchangeable, such as “A101-1 A” and “A101-1 D”.

A change in dash number indicates a change in form, fit, and/or function (e.g. part number C339-1 is not interchangeable with part number C339-10 even though both are jackshaft weldments for [hydraulic] R44s). Similarly, part numbers F049-6 and F049-06 are not interchangeable because the dash numbers are different.

B. Returning Parts

All parts shipped to RHC must include a signed Component Return/Authorization (CRA) Form available online at www.robinsonheli.com.

C. Ordering and Shipping

Procure parts from any R44 Dealer or Service Center, or order directly from assigned RHC Customer Service Representative via email, fax, or phone.

D. Warranty Claims

Complete CRA Form (refer to Part B) and, in the Warranty Claim section, indicate if rotorcraft or component is under warranty. If claim is for parts or for labor allowance due to a Service Bulletin issued against rotorcraft or component, write in “per SB-XX” adjacent to requested warranty action.

E. Customer Support

Please visit www.robinsonheli.com for Customer Support contact information.

Intentionally Blank

TABLE 1 SCHEDULED INSPECTIONS Consult latest revision of listed publications for specific applicability.	First 10 hours	First 25 hours	First 100 hours	Every 50 hours	Every 100 hours	Every 300 hours	Every 500 hours	Every 2200/2400 hours	Every 4 months	Every 12 months	Every 24 months	Every 3 years	Every 4 years	Every 12 years	Every 15 years
Perform inspection per Lycoming Operator's Manual.*	●	●		●	●	■									
Perform **Lycoming SI 1129** *Methods of Checking DC Alternator and Generator Belt Tension.*		●			●										
Perform **Lycoming SI 1191** *Cylinder Compression.*					●										
Perform **Lycoming SI 1080** *Maintenance Items for Special Attention.*				●	●										
Perform **Lycoming SB 301*** *Maintenance Procedures and Service Limitations for Valves.*			■			■									
Perform **Lycoming SB 366, as applicable** *Carburetor Throttle Body Screw Inspection.*				●											
Perform **Lycoming SB 342 (IO-540 Only)** *Fuel Line (Stainless Steel Tube Assy.) and Support Clamp Inspection & Installation. Reference AD 2015-19-07.*					●										
Perform **Lycoming SB 388*** (also applies to replacement cylinders) *Procedure to Determine Exhaust Valve and Guide Condition.*			■			■									
Perform **Lycoming SB 480 (and R44 SL-83, as applicable)** *I. Oil & Filter Change & Screen Cleaning / II. Oil Filter/Screen Content Inspection. NOTE: Oil filters on D723-1 adapters do not require safety wire.*		●		●					●						
Perform **CMI SB 643, as applicable** *Maintenance Intervals for All CMI/TCM/Bendix Magnetos & Related Equipment.*					●		●						●	●	
Perform **CMI SB 658, as applicable** *Distributor Gear Maintenance.*					●		●						●		
Perform **CMI SB 663** *Two-Wire Magneto Tach. Breaker Contact (Points) Assy. P/N 10-400507.*							●						●		
Perform **CMI SB 670** *Replacement and maintenance of Magneto Distributor Block.*							●						●		
Perform 100-hour/annual inspection per § 2.400.					●					●					
Perform main rotor blade tip maintenance per § 28-60.					●					●					
Lubricate C181-3 bearing per § 1.140.						●						●			
Replace hydraulic filter per § 1.170.						●									
Drain and flush gearboxes per § § 1.120 & 1.130.							●								
Clean gearbox chip detectors per § 1.115.							●			●					
Perform clutch assembly lubricant inspection & servicing per § 7.210.							●								
Verify magneto drive cushion pliability (must tolerate 180° bend).							●						●		
Perform 2200-hour/2400-hour/12-Year inspection per § 2.600.								●						●	
Perform pressure relief valve leakage check per § 12-83.										●					
Inspect ELT per 14 CFR § 91.207 (U.S.-registered helicopters only).										●					
Perform pop-out float leak check per § 5.630.										●					
Test and inspect transponder per 14 CFR § 91.413 (U.S.-registered helicopters only).											●				
Perform pop-out float inflation check per § 5.640.												●			
Perform pop-out float pressure cylinder hydrostatic test (per U.S. DOT reg).*												■			
Pop-out float pressure cylinder maximum life.															●

* Gray square indicates a shorter interval than published on referenced document.

1.100 Helicopter Servicing

1.101 Scheduled Inspections

Required maintenance and inspection intervals are given in Table 1. Publications listed are subject to revision.

Also consult the following for specific applicability, as some aircraft may require maintenance and inspections in addition to the requirements in Table 1:

- Aircraft maintenance records
- Manufacturers' Service Bulletins (SBs)
- Aviation regulations
- Airworthiness Limitations
- Airworthiness Directives (ADs)

Preventive maintenance is required between scheduled inspections. Fluid leaks, discoloration, fretting, galling, chafing, nicks, scratches, dents, cracks, and corrosion all warrant further investigation. Unairworthy items must be replaced or repaired.

NOTE
If a component or an inspection is scheduled for hourly and calendar intervals, comply with whichever requirement comes first, then reset interval unless otherwise specified.

1.102 Additional Component Maintenance

> NOTE
>
> RHC-manufactured parts not listed in § 1.102 as requiring additional component maintenance, or replacement per § 3.300, are "on condition".

A. 12 YEARS

Perform action indicated on the following components when they have accumulated 12 years calendar time and less than 2200 hours (R44 S/Ns 0001 thru 9999 & R44 II S/Ns 10001 thru 29999) or 2400 hours (R44 Cadet S/Ns 30001 & subsequent) time in service since new, since last overhaul, or since last 12-year maintenance:

Part Number	Description	Action
A120-3	Tail Rotor Bellcrank Assembly	Replace with new.
A130-48	Spacer	Replace with new, per R44 SL-80.
A190-3	V-Belt Set	Replace with new.
A336-6 or -9	Push-Pull Tube, Throttle (R44 II)	Visually inspect. If exterior corrosion is evident, record length, disassemble, and inspect tube interior. Repair or replace as required.
A462-4	Fitting (mixture control arm)	Visually inspect. Replace if worn or corroded.
A650-2 or -4	Fitting (MRGB mount)	Visually inspect, including bore. Replace if worn or corroded.
A785-6	Hose (bulkhead to MRGB)	Replace with new.
A785-7	Hose (alternator cooling)	Replace with new.
A785-10	Hose (carb heat scoop to airbox)	Replace with new.
A785-11	Hose (engine LH cowling to airbox)	Replace with new.
A785-12	Hose (scroll to muffler shroud)	Replace with new.
A785-13	Hose (muffler shroud to cabin heat inlet)	Replace with new.
A785-16	Hose (scroll to MRGB)	Replace with new.
A785-17	Hose (scroll to bulkhead)	Replace with new.
A785-19	Hose (magneto cooling)	Replace with new.
A785-28	Hose (bulkhead to hydraulic reservoir)	Replace with new.
A785-31	Hose (R44 II engine air intake)	Replace with new.
A785-32	Hose (alternator cooling)	Replace with new.
A918-1 thru -8	Elastic Cord – Tail Rotor	Replace with new. Dash number is selected during flight test evaluation.
A947-2	Flex Plate Assembly (bonded)	Visually inspect with 10x magnification. Replace if any bonded washer evidences separation (8 places). Replace if corrosion is evident.

1.102 Additional Component Maintenance (continued)

A. 12 YEARS (continued)

Part Number	Description	Action
B173-2, -3, or -6	V-Belt – Alternator	Replace with new.
B173-4	V-Belt – A/C Compressor Drive	Replace with new.
B283-1	Hose Assembly (oil pressure sender)	Replace with new.
B283-3	Hose Assembly (fuel; various)	Replace with new.
B283-7	Hose Assembly (fuel control to flow divider)	Replace with new.
B283-10	Hose Assembly (engine-driven pump to fuel control)	Replace with new.
B283-11	Hose Assembly (fuel return)	Replace with new.
C005-4	Main Rotor Hub (C154-1) & Bearing Assembly	Perform inspection and repair per § 28-22, return to RHC for inspection and repair, or replace with new.
C005-12	C016-7 Main Rotor Blade & C158-1 Spindle Assembly	Submit to RHC-authorized component maintenance facility for 12-year service, or replace with new or overhaul exchange. 12-year maintenance includes blade replacement (as required), pitch horn screw replacement, boot and o-ring replacement, and inspection.
C006-3, -6, or -8	Main Rotor Gearbox Assembly	Submit to RHC Repair Station for 12-year service, or replace with new or overhaul exchange. 12-year maintenance includes pinion seal replacement, o-ring replacement, sealed bearing replacement, rubber mount replacement, and inspection.
C007-5	Fanshaft Assembly	Inspect C181-3 bearing per § 2.502 step 3. Lubricate per § 1.140.
C008-4	Tail Rotor Assembly	Replace with new C008-9 tail rotor assembly.
C008-9	Tail Rotor Assembly	Disassemble. Remove bushings and teeter hinge bearings. Inspect hub; verify no fretting or corrosion. Fluorescent penetrant inspect hub. Replace blades as required. Replace teeter hinge bearings and blade attach bolts.
C011-2 & -3	Arm Assembly – Throttle (forward & aft, R44)	Visually inspect. Replace with D756 if corrosion is evident. Verify bearing rotates smoothly without noise.
C014-X	Landing Gear Assembly	Perform 12-year service per § 2.650 Part A.
C015-1	Cabin Assembly	Remove B270-1 sealant from aft-side of aluminum C259 panels at junction of steel horizontal firewall and inspect panels for corrosion. Repair as required. Replace sealant.
C017-4	Swashplate Assembly	Perform 12-year service per § 2.640, or replace with new or overhaul exchange C017-6 swashplate.

1.102 Additional Component Maintenance (continued)

A. 12 YEARS (continued)

Part Number	Description	Action
C017-6	Swashplate Assembly	Perform 12-year service per § 2.640, or replace with new or overhaul exchange.
C018-2 or -3	Clutch Assembly (C166-4 shaft)	Replace with new or overhaul exchange C018-4 or -5 clutch assembly.
C018-4 or -5	Clutch Assembly (C166-5 shaft)	Submit to RHC-authorized component maintenance facility, or replace with new or overhaul exchange. 12-year maintenance includes plug, seal and o-ring replacement, C184 bearing lubrication, and inspection.
C020-1 or -2	C020-1 (standard) or C020-2 (tie-down provisions) Upper Frame Assembly	Visually inspect for corrosion. If corrosion is found, remove paint per § 23-71 and MPI per § 23-41. Powder coat per § 23-76 (preferred), or prime & paint per §§ 23-75 & 23-77.
C021-1	Tail Rotor Gearbox Assembly	Perform 12-year service per § 2.610, or replace with new or overhaul exchange.
C031-1	Tail Rotor Pitch Control	Replace with new.
C041-11	Bearing Assembly – TRDS Damper	Replace with new.
C046-1, -19, -21, or -23	Lower Frame Assembly – LH	Visually inspect for corrosion. If corrosion is found, remove paint per § 23-71 and MPI per § 23-41. Powder coat per § 23-76 (preferred), or prime & paint per §§ 23-75 & 23-77.
C046-2	Lower Frame Assembly – RH	Visually inspect for corrosion. If corrosion is found, remove paint per § 23-71 and MPI per § 23-41. Powder coat per § 23-76 (preferred), or prime & paint per §§ 23-75 & 23-77.
C051-1 or -2	Clutch Actuator Assembly	Submit to RHC Repair Station for 12-year service, or replace with new or overhaul exchange.
C119-2	Bumper – Tail Rotor	Replace with new.
C121-1, -3 or -30, -19, & -24 or -28	Push-Pull Tube Assembly – Main Rotor	Visually inspect. If exterior corrosion is evident, record length, disassemble, and inspect tube interior. Repair or replace as required.
C121-9, -15, & -17	Push-Pull Tube Assembly – Tail Rotor	Visually inspect. If exterior corrosion is evident, record length, disassemble, and inspect tube interior. Repair or replace as required.
C121-21	Push-Pull Tube Assembly – Throttle	Visually inspect. If exterior corrosion is evident, record length, disassemble, and inspect tube interior. Repair or replace as required.
C121-25 or -31	Push-Pull Tube Assembly – Swashplate	Measure & record overall length. Remove rod ends and visually inspect, including tube interior. Replace if corrosion is evident.
C169-3, -32, -36, or -38	Muffler Assembly	Visually inspect muffler interior; verify no obvious damage and no loss of material.
C258-1	Main Rotor Pitch Link Assembly	Replace with new C258-5 link assembly.

1.102 Additional Component Maintenance (continued)

A. 12 YEARS (continued)

Part Number	Description	Action
C258-5	Main Rotor Pitch Link Assembly	Perform inspection per § 2.630, or replace with new.
C315-9	Support Weldment – Lower Aft Flight Controls	Visually inspect. If exterior corrosion is evident, remove and inspect tube interior. Repair or replace as required.
C319-5	Torque Tube – Cyclic	Visually inspect. If exterior corrosion is evident, remove and inspect tube interior. Repair or replace as required.
C334-4	Bellcrank Assembly (Collective)	Visually inspect. If exterior corrosion is evident, remove and inspect tube interior. Repair or replace as required. Verify bearings rotate smoothly without noise.
C336-1	Push-Pull Tube Assembly, Throttle (R44)	Visually inspect. If exterior corrosion is evident, record length, disassemble, and inspect tube interior. Repair or replace as required.
C339-1 or -10	Jackshaft Weldment	Visually inspect. Repair or replace as required.
C343-1*, -9, & -11 (*R44 SL-43 refers)	Push-Pull Tube Assembly – Tail Rotor	Visually inspect. If exterior corrosion is evident, record length, disassemble, and inspect tube interior. Repair or replace as required.
C343-8	Tube – Aft Servo	Visually inspect. If exterior corrosion is evident, record length, disassemble, and inspect tube interior. Repair or replace as required.
C348-1	Anchor Assembly – Collective Stop	Visually inspect. If exterior corrosion is evident, remove and inspect tube interior. Repair or replace as required.
C348-5	Anchor Assembly – Seat Belt (Forward)	Visually inspect. If exterior corrosion is evident, remove and inspect tube interior. Repair or replace as required.
C480-1	Swashplate Boot	Replace with new.
C608-1	Support Weldment – Throttle Bellcrank	Visually inspect. If exterior corrosion is evident, remove and inspect tube interior. Repair or replace as required.
C649-1	Oil Cooler	Replace with new or overhauled C649-2 oil cooler.
C649-2 & -3	Oil Cooler	Flush & 400-psi pressure test or overhaul or replace with new.
C792-4 or -5	Dual Tachometer	Submit to RHC Repair Station for 12-year service, or replace with new or overhaul exchange.
C918-15	Elastic Cord – Collective	Replace with new A918-20 cord.
C947-1 & -3	Flex Plate Assembly (bonded)	Visually inspect with 10x magnification. Replace if corrosion is evident. Replace if any bonded washer evidences separation (8 places).

1.102 Additional Component Maintenance (continued)

A. 12 YEARS (continued)

Part Number	Description	Action
D046-1 & -2	Strut Weldment – LH	Visually inspect for corrosion. If light corrosion is found, remove corrosion & paint per § 23-71 and MPI per § 23-41. Powder coat per § 23-76 (preferred), or prime & paint per §§ 23-75 & 23-77.
D046-3	Strut Weldment – RH	Visually inspect for corrosion. If light corrosion is found, remove corrosion & paint per § 23-71 and MPI per § 23-41. Powder coat per § 23-76 (preferred), or prime & paint per §§ 23-75 & 23-77.
D151-2	Stop (teeter, 2 each)	Replace with new.
D174-2	Fanwheel	Perform 12-year service per § 2.620, or replace with new or overhaul exchange.
D201-5	Support Assembly – Hydraulic Servos (fwd)	Replace with new D201-6 support assembly. Use NAS6604H16 bolt & NAS1149F0432P washer and safety wire (4 places) to secure servos.
D203-1	Support Assembly – LH (aft servo)	Visually inspect. If exterior corrosion is evident, record length, disassemble, and inspect tube interior. Repair or replace as required.
D204-8	Support Assembly – RH (aft servo)	Visually inspect. If exterior corrosion is evident, record length, disassemble, and inspect tube interior. Repair or replace as required.
D207-1	Strut Weldment – Jackshaft, Forward	Visually inspect. If exterior corrosion is evident, record length, disassemble, and inspect tube interior. Repair or replace as required.
D208-1	Strut Weldment – Jackshaft, Aft	Visually inspect. If exterior corrosion is evident, record length, disassemble, and inspect tube interior. Repair or replace as required.
D211-1 or -2	Hydraulic Reservoir	Perform 12-year service per § 2.660, or replace with new or overhaul exchange.
D212-1	Hydraulic Servo Actuators	Remove upper clevis, scissor, and D200-3 washer from servo, as applicable. Visually inspect threaded bore in piston shaft with borescope. Replace servo if corrosion is evident.
D224-1 or -2	Tail Rotor Drive Shaft	Remove yoke(s) and inspect shaft interior using borescope. Replace shaft if corrosion is evident.
D278-1 or -2	Governor Controller	Submit to RHC Repair Station for 12-year service, or replace with new or overhaul exchange.
D321-1	Valve – Pressure Relief (Fuel)	Replace with new or overhaul exchange.
D731-1	Bellcrank Assembly – Throttle, R44 II	Visually inspect. If exterior corrosion is evident, remove and inspect tube interior. Verify bearings rotate smoothly without noise. Repair or replace as required.
D731-9	Bellcrank Assembly – Throttle, R44 II (fuel control)	Visually inspect. Replace if corrosion is evident. Verify bearing rotates smoothly without noise.

1.102 Additional Component Maintenance (continued)

A. 12 YEARS (continued)

Part Number	Description	Action
D756-1	Bellcrank Assembly (forward, R44 II)	Visually inspect. Replace if corrosion is evident. Verify bearing rotates smoothly without noise.
D756-3 & -4	Bellcrank Assembly (forward & aft, R44)	Visually inspect. Replace if corrosion is evident. Verify bearing rotates smoothly without noise.
D778-1	Cartridge – Air Conditioning Pulley Drive (R44 II or Cadet only)	Replace with new or overhaul exchange.
D918-1 & -2	Elastic Cords – Cyclic	Replace with new.
NAS1149E0363R	Washer (corrosion resistant, mixture arm, 2 each)	Replace with new C141-26 washers, per R44 SL-80.
21FKF-518	Nut (exhaust riser, 12 each)	Replace with new.
21FKF-813	Jam Nut (MR pitch link, 2 each)	Replace with new.

1.102 Additional Component Maintenance (continued)

B. 2200/2400 Hours

Perform action indicated on the following components when they have accumulated 2200 hours (R44 S/Ns 0001 thru 9999 & R44 II S/Ns 10001 thru 29999) or 2400 hours (R44 Cadet S/Ns 30001 & subsequent) time in service since new or since last overhaul:

Part Number	Description	Action
A120-3	Tail Rotor Bellcrank	Replace with new.
A130-21	Spacer (at R44 and R44 Cadet powerplant controls)	Replace with new.
A130-48	Spacer	Replace with new, per R44 SL-80.
A190-3	V-Belt Set	Replace with new.
A336-6, -9	Push-Pull Tube – Throttle (R44 II)	Replace with new.
A462-4	Fitting	Replace with new.
A522-7	Control Cable – Mixture (carburetor)	Replace with new.
A522-13	Control Cable – Mixture (fuel control)	Replace with new.
A595-1	Seal – Vertical Firewall (neoprene)	Replace with new.
A595-2	Seal – Vertical Firewall (Teflon®)	Replace with new.
A650-2 or -4	Fitting – MRGB Mount	Visually inspect, including bore. Replace if worn or corroded. Magnetic particle inspect per § 23-41.
A729-33	Tube (aux fuel pump drain)	Replace with new.
A785-6	Hose (bulkhead to MRGB)	Replace with new.
A785-7	Hose (alternator cooling)	Replace with new.
A785-10	Hose (carb heat scoop to airbox)	Replace with new.
A785-11	Hose (engine LH cowling to airbox)	Replace with new.
A785-12	Hose (scroll to muffler shroud)	Replace with new.
A785-13	Hose (muffler shroud to cabin heat inlet)	Replace with new.
A785-16	Hose (scroll to MRGB)	Replace with new.
A785-17	Hose (scroll to bulkhead)	Replace with new.
A785-19	Hose (magneto cooling)	Replace with new.
A785-28	Hose (bulkhead to hydraulic reservoir)	Replace with new.
A785-31	Hose (R44 II engine air intake)	Replace with new.
A918-1 thru -8	Elastic Cord – Tail Rotor	Replace with new. Dash number is selected during flight test evaluation.
A947-2	Flex Plate Assembly (intermediate)	Replace with new.
B173-2, -3, or -6	V-Belt – Alternator	Replace with new.
B173-4	V-Belt – A/C Compressor Drive	Replace with new.
B277-024	Clamp	Replace with new.
B277-036	Clamp	Replace with new.

1.102 Additional Component Maintenance (continued)

B. 2200/2400 Hours (continued)

Part Number	Description	Action
B283-1	Hose Assembly (oil pressure sender)	Replace with new.
B283-3	Hose Assembly (fuel; various)	Replace with new.
B283-7	Hose Assembly (fuel control to flow divider)	Replace with new.
B283-9 or -11	Hose Assembly (fuel return)	Replace with new B283-11 hose assembly.
B283-10	Hose Assembly (engine-driven pump to fuel control)	Replace with new.
B345-4	Pitch Link (tail rotor)	Replace with new.
B350-3	Spring Pin (fanwheel retaining nut)	Replace with new.
C005-4	C154-1 Main Rotor Hub Assembly	Replace with new.
C005-12	C016-7 Main Rotor Blade & C158-1 Spindle Assembly	Replace with new or overhaul exchange C005-12 main rotor blade & spindle assembly, as required.
C006-3, -6, or -8	Main Rotor Gearbox Assembly	Replace with new or overhaul exchange C006-8 main rotor gearbox assembly.
C007-5	Fanshaft Assembly	Replace with new.
C008-4 or -9	Tail Rotor Assembly	Replace with new C008-9 tail rotor assembly.
C014-X	Landing Gear Assembly	Perform 2200-Hour/2400-Hour service per § 2.650 Part B.
C017-4 or -6	Swashplate Assembly	Replace with new or overhaul exchange C017-6 swashplate assembly.
C018-2 or -3	Clutch Assembly (C166-4 shaft)	Replace with new or overhaul exchange C018-4 or -5 clutch assembly.
C018-4 or -5	Clutch Assembly (C166-5 shaft)	
C020-1	Upper Frame Assembly (standard)	Replace with new.
C020-2	Upper Frame Assembly (with tie-downs)	Replace with new.
C021-1	Tail Rotor Gearbox Assembly	Replace with new or overhaul exchange.
C031-1	Tail Rotor Pitch Control	Replace with new.
C046-1, -19, -21, or -23	Lower Frame Assembly – LH	Remove paint per § 23-71 and MPI per § 23-41. Powder coat per § 23-76 (preferred), or prime & paint per §§ 23-75 & 23-77.
C046-2	Lower Frame Assembly – RH	Remove paint per § 23-71 and MPI per § 23-41. Powder coat per § 23-76 (preferred), or prime & paint per §§ 23-75 & 23-77.
C051-1 or -2	Clutch Actuator Assembly	Replace with new or overhaul exchange.
C106-X	Journal, Main Rotor Hub	Replace with new, or: Visually inspect using 10x magnification for obvious damage; magnetic particle inspect per § 23-41.

1.102 Additional Component Maintenance (continued)

B. 2200/2400 Hours (continued)

Part Number	Description	Action
C119-2	Bumper (tail rotor)	Replace with new.
C121-17	Push-Pull Tube (tailcone)	Replace with new.
C121-25 or -31	Push-Pull Tube Assembly – Swashplate	Disassemble, remove paint per § 23-71, fluorescent penetrant inspect per § 23-42, and replace as required. Clean, prime, & paint per § 23-60.
C152-1	Thrust Washer	Replace with new, or: Visually inspect using 10x magnification for obvious damage; magnetic particle inspect per § 23-41.
C169-1 or -35	Exhaust Muffler Assembly	Replace with new C169-35 assembly.
C169-31 or -37	Exhaust Muffler Assembly	Replace with new C169-37 assembly.
C174-1 Revision A thru F	Support (engine mount at prop governor pad; constant 0.5-inch dia. vertical tube)	Replace with new C174-1 Revision G or subsequent.
C174-1 Revision G or subsequent	Support (engine mount at prop governor; vertical tube lower portion is 0.562 inch dia.)	Magnetic particle inspect support.
C182-1	Nut (fanwheel retaining)	Replace with new.
C189-14	Nut (MR hub bolt)	Replace with new.
C258-1	Main Rotor Pitch Link Assembly	Replace with new C258-5 link assembly.
C258-5	Main Rotor Pitch Link Assembly	Replace with new, or perform inspection per § 2.630 and magnetic particle inspect barrel.
C339-1 or -10	Jackshaft Weldment	Visually inspect. Repair or replace as required.
C343-1*, -9, & -11 (*R44 SL-43 refers)	Push-Pull Tube Assembly – Tail Rotor	Visually inspect. If exterior corrosion is evident, record length, disassemble, and inspect tube interior. Repair or replace as required.
C480-1	Swashplate Boot	Replace with new.
C522-7	Control Cable – Carburetor Heat	Replace with new.
C568-1	Scoop Assembly (carburetor heat)	Replace with new.
C615-1	Gasket (airbox-to-carburetor)	Replace with new.
C627-4, -5, or -6	4-/5-point Harness Assembly	Replace with new.
C628-5, -6, -7, or -8	Connector Assembly	Replace with new.
C749-1	Nozzle Assembly (MRGB cooling)	Replace with new.
C792-4 or -5	Dual Tachometer	Replace with new or overhaul exchange.

1.102 Additional Component Maintenance (continued)

B. 2200/2400 Hours (continued)

Part Number	Description	Action
C907-1 or -2 Revision A thru G	Yoke – Clutch Shaft Forward (1.43-inch dia. center hole)	Replace with new C907-1 or -2 Revision H or subsequent yoke.
C907-1 or -2 Revision H or subsequent	Yoke – Clutch Shaft Forward (1.471-inch dia. bore)	Replace with new, or: Remove paint per § 23-71, visually inspect using 10x magnification for obvious damage, magnetic particle inspect per § 23-41, and prime & paint per § 23-60.
C918-15	Elastic Cord (collective)	Replace with new A918-20 cord.
C947-1 & -3	Flex Plate Assembly (forward & aft)	Replace with new.
D046-1 & -2	Strut Weldment – LH	Remove paint per § 23-71. MPI per § 23-41. Powder coat per § 23-76 (preferred), or prime & paint per §§ 23-75 & 23-77.
D046-3	Strut Weldment – RH	Remove paint per § 23-71. MPI per § 23-41. Powder coat per § 23-76 (preferred), or prime & paint per §§ 23-75 & 23-77.
D079-1	Tail Rotor Guard Assembly	Replace with new.
D082-1	Tube Assembly (weldment, TR guard)	Replace with new, or: liquid-strip paint per § 23-71, MPI per § 23-41, & prime per § 23-60.
D174-2	Fanwheel	Replace with new or overhaul exchange.
D201-5	Support Assembly – Hydraulic Servos (fwd)	Replace with new D201-6 support assembly. Use NAS6604H16 bolt & NAS1149F0432P washer and safety wire (4 places) to secure servos.
D203-1	Support Assy, LH – Aft Hydraulic Servo	Remove paint per § 23-71. MPI per § 23-41. Clean, prime, & paint per § 23-60.
D204-8	Support Assy, RH – Aft Hydraulic Servo	Remove paint per § 23-71. MPI per § 23-41. Clean, prime, & paint per § 23-60.
D211-1 or -2	Hydraulic Reservoir	Replace with new or overhaul exchange.
D212-1	Hydraulic Servo Actuators	Replace with new or overhaul exchange.
D224-1 & -2	Tail Rotor Drive Shaft Assembly	Replace with new.
D270-1	Governor Controller (with EMU)	Replace with new or overhaul exchange.
D278-1 or -2	Governor Controller	Replace with new or overhaul exchange.
D321-1	Valve – Pressure Relief (Fuel)	Replace with new or overhaul exchange.
D333-3	Fitting (carb heat control cable)	Replace with new.
D500-1	Hydraulic Pump	Replace with new or overhaul exchange.
D543-2	Spacer (fuel control throttle bellcrank)	Replace with new.
D730-8	Brace (fuel control)	Replace with new.

1.102 Additional Component Maintenance (continued)

B. 2200/2400 Hours (continued)

Part Number	Description	Action
D735-1	Sleeve – Fuel Control Inlet Fitting (orange, insulated)	Replace with new.
D743-1, -2, -3 or -4	Pump – Fuel (electric)	Replace with new D743-3 pump. For helicopter S/N 13158 and prior equipped with D743-1, -2, or -4 aux fuel pump, also order KI-206-3 Provisions Kit.
D778-1	Cartridge – Air Conditioning Pulley Drive (R44 II or Cadet only)	Replace with new or overhaul exchange.
D918-1 & -2	Elastic Cords – Cyclic	Replace with new.
D930-1	Mixture Spring (fuel control)	Replace with new.
F628-1	Connector Assembly	Replace with new.
F628-3	Connector Assembly	Replace with new.
F628-7	Buckle Assembly	Replace with new.
KI-6604	C017-5 Swashplate Installation Parts Kit Instructions	Replace existing parts with kit parts.
21FKF-518	Nut (exhaust riser, 12 each)	Replace with new.
AN3-41A	Bolt (oil cooler retaining)	Replace with new.
AN3-44A	Bolt (oil cooler retaining)	Replace with new.
AN735-4	Clamp (mixture cable-to-C577-2 bracket)	Replace with new.
MS16562-4	Spring Pin (in D333-3 fitting)	Replace with new.
MS20002-24	Washer (thick, fanwheel retaining nut)	Replace with new.
NAS1149E0363R	Washer (corrosion resistant, mixture arm, 2 each)	Replace with new C141-26 washers, per R44 SL-80.
NAS1149F2432P	Washer (thin, fanwheel retaining nut)	Replace with new.
NAS634-105	Bolt (MR hub)	Replace with new.

C. Engine Maintenance

Refer to latest revisions of Textron Lycoming Service Instruction No. 1009 and Lycoming Service Bulletin No. 240.

D. Airframe and Engine Accessory Maintenance

Refer to accessory manufacturer's instructions for continued airworthiness for accessory maintenance. Remove accessories per R44 Maintenance Manual or accessory manufacturer's instructions as required.

Intentionally Blank

1.115 Chip Detector Cleaning

NOTE

During normal operation of gearboxes using A257-2 oil, an insulating film of varnish can accumulate on a chip detector's magnet which could prevent metallic debris from illuminating the chip warning light. Proper cleaning of chip detectors per the following steps is critical to chip detector function.

WARNING

Review appropriate Safety Data Sheet (SDS) when working in proximity to hazardous materials. Specific recommendations for use of personal protective equipment are located in the SDS.

1. Remove and discard safety wire, if applicable, securing chip detector. Disconnect chip detector wiring from airframe harness at connectors. For tail gearbox, place suitable drain container below gearbox to catch oil and remove chip detector.
2. Clean chip detector using a toothbrush and approved solvent (refer to § 23-72). Remove debris using compressed air or masking tape; do not use a magnet. Dry chip detector using compressed air or a lint-free cloth. Inspect condition.
3. Connect chip detector wiring to airframe harness at connectors. Turn battery switch on. Touch detector's magnet to airframe and verify appropriate gearbox caution light illuminates. Turn battery switch off. Disconnect chip detector wiring from airframe harness at connectors.
4. Install chip detector. Special torque threaded-type chip detector per § 23-33; install safety wire as required (refer to R44 SL-45). Connect chip detector wiring to airframe harness at connectors.
5. Turn battery switch on. Depress push-to-test button(s) and verify appropriate gearbox caution light illuminates. Turn battery switch off.

1.120 Main Rotor Gearbox Drain And Flush

1. Run-up helicopter for approximately five minutes at 60–70% RPM per applicable Pilot's Operating Handbook (POH) Section 4 as required to warm oil and expedite draining.
2. Disconnect chip detector wiring from airframe harness at connectors. Remove chip detector from housing.
3. Check for oil leaking from chip detector housing. Leakage indicates housing is defective and must be replaced. If leakage occurs, immediately install main rotor gearbox drain assembly to minimize oil spillage.

1.120 Main Rotor Gearbox Drain and Flush (cont'd)

4. Drain oil by installing main rotor gearbox drain assembly in chip detector housing with drain hose overboard into a suitable container. Slide wedge under drain assembly to open valve (see Figure 1-2).

5. Remove drain assembly. Remove and discard safety wire securing gearbox filler plug. Remove plug.

6. Fill gearbox with SAE30, SAE40, SAE50, or SAE20W50 straight mineral engine oil to level indicated by decal adjacent to sight gage.

7. Install filler plug, tighten, but do not safety wire.

8. Ground run helicopter for approximately five minutes at 60-70% RPM.

9. After shutting down helicopter, drain gearbox using drain assembly.

10. Remove drain assembly. Remove and discard safety wire on chip detector housing. Remove chip detector housing and immediately place a small container under gearbox to catch any residual oil.

11. Clean chip detector with a toothbrush and cleaning solvent per Section 1.115. Compressed air or masking tape may also be used to remove debris but scrubbing with solvent is mandatory to remove any varnish accumulation. Do not use a magnet to remove debris. Clean and visually inspect chip detector housing.

12. Verify chip detector function by connecting electrical leads, turning Master switch on, and touching detector's central magnetic probe to horizontal firewall. MR CHIP warning light should illuminate. Disconnect electrical wires.

13. Install chip detector housing into main rotor gearbox. Torque per Section 1.330, and safety wire.

14. Install chip detector into chip detector housing. Torque threaded-type chip detector per Section 1.330 and safety wire. Connect chip detector electrical wires and ty-rap.

15. As required, remove sight gage and clean with solvent. Reinstall sight gage, torque per Section 1.330, and safety wire.

16. Remove filler plug. Fill gearbox with Robinson A257-2 lubricant to level indicated on decal. Rotate rotor system by hand several revolutions and pull down tailcone several times. Recheck gearbox oil level. Adjust as necessary.

17. Torque filler plug per Section 1.330 (safety wire not required).

1.120 Main Rotor Gearbox Drain and Flush (cont'd)

18. Turn on MASTER switch. Check chip detector operation by grounding detector's center terminal and verifying MR CHIP warning light illuminates. Turn off MASTER switch.

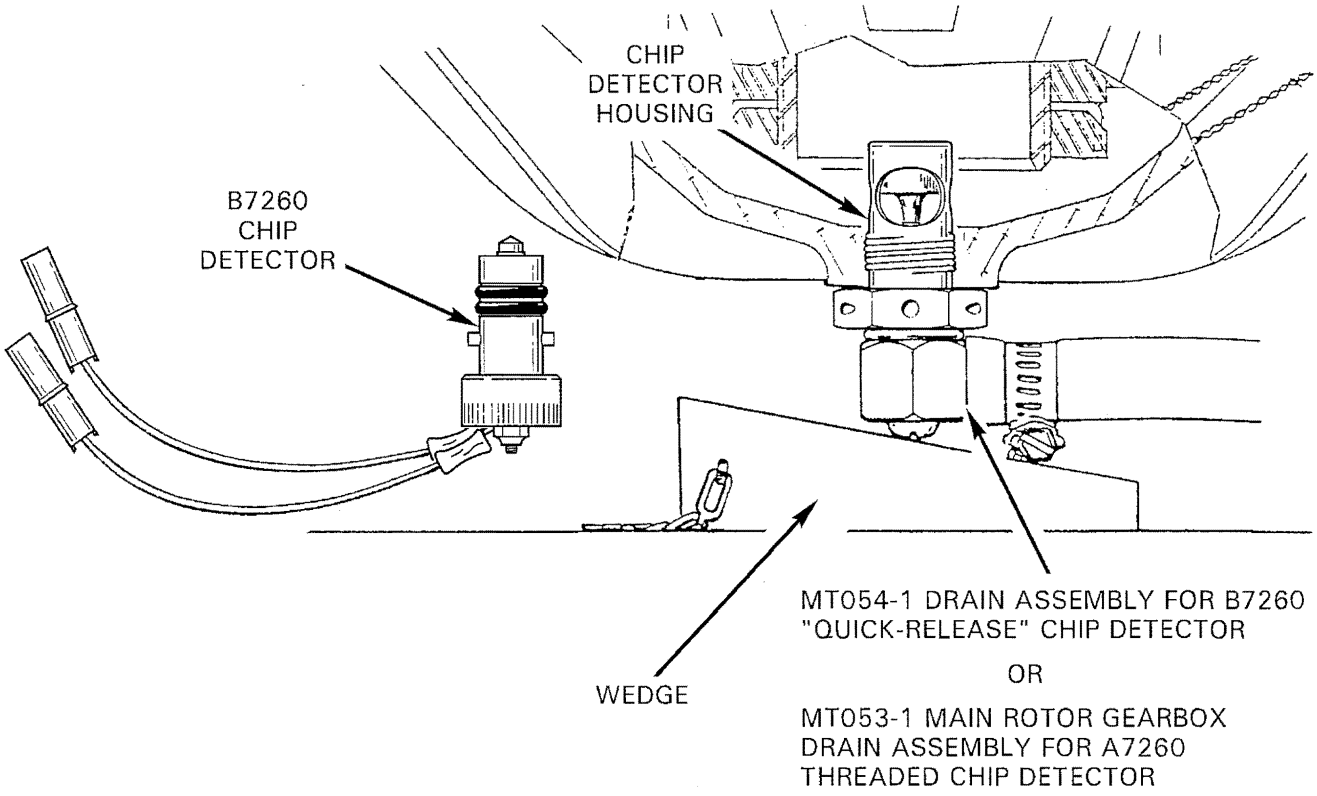

FIGURE 1-2 DRAINING MAIN ROTOR GEARBOX

1.130 Tail Rotor Gearbox Drain and Flush

1. Ground run helicopter for approximately five minutes at 60-70% RPM to warm tail rotor gearbox oil.

2. Disconnect chip detector wiring at quick-disconnect located approximately 11 inches from chip detector.

3. Remove and discard safety wire securing chip detector to sight gage.

4. Place a container under tail rotor gearbox to catch oil and remove chip detector.

5. Remove and discard safety wire securing filler-vent plug to sight gage. Remove filler-vent plug.

6. Install chip detector, torque per Section 1.330, but do not safety wire. Add approximately five ounces of SAE30, SAE40, SAE50, or SAE20W50 straight mineral engine oil.

7. Install filler plug, tighten, but do not safety wire.

8. Ground run helicopter at 60-70% RPM for approximately five minutes.

9. After shutting down helicopter, remove chip detector and drain mineral oil.

10. Clean and scrub chip detector with a toothbrush and cleaning solvent. Compressed air or masking tape may also be used to remove debris but scrubbing with solvent is mandatory to remove varnish accumulation. Do not use a magnet to remove debris.

11. Connect chip detector wiring. Turn on Master switch. Check chip detector operation by grounding detector's center terminal; TR CHIP warning light should illuminate. Turn off Master switch and disconnect chip detector wiring.

12. Install chip detector, torque per Section 1.330, and safety wire. Connect chip detector wiring and secure with Ty-raps® as required.

13. As required, remove sight gage and clean with solvent. Reinstall sight gage, torque per Section 1.330, and safety wire.

> CAUTION
>
> Tail rotor gearbox sight plug glass must indicate correct oil level when aircraft is on level ground.

14. Fill gearbox with Robinson A257-2 lubricant to level indicated by sight glass decal. Install filler-vent plug, torque per Section 1.330, and safety wire.

15. Turn on Master switch. Check chip detector operation. Turn off Master switch.

1.140 Clutch Actuator Lower Bearing Lubrication

> NOTE
>
> Syringe suitable for the following procedure is included in kit KI-115, available from RHC Customer Service.

1. Fill syringe with 4-5 grams of A257-12 grease (commercially available, see Section 1.470). Note: 5 grams of grease fills a 1.0 inch (25 mm) long space inside a syringe body with a 0.63 inch (16 mm) inner diameter.

2. Remove screw from left side of C181-3 bearing housing. Screw may be covered by Telatemp; remove Telatemp as required to access screw. It is not necessary to replace Telatemp. Note: aft cowling may be removed to ease bearing access.

3. Using syringe, inject grease through screw hole.

4. Install B289-3 self-sealing cross-head screw, or thoroughly clean set screw and screw hole threads and then install set screw using B270-20 sealant, wet epoxy primer, or wet zinc-chromate primer on threads. Tighten set screw only until screw is flush with bearing housing.

> **CAUTION**
>
> Set screw hole is through to bearing housing cavity. Tightening set screw further than flush-with-housing can result in set screw contacting and damaging internal bearing assembly components.

5. Ground run helicopter at 102% RPM for two minutes, shut down, inspect bearing, and clean off any escaped grease.

6. Install aft cowling, if removed.

1.150 Defueling

> **WARNING**
>
> **Defueling must be done in a well-ventilated area. No smoking within 100 feet of helicopter during defueling.**

> NOTE
>
> Low-fuel sender check (see Section 12.270) may be performed when defueling helicopter.

1. Turn fuel valve off and disconnect flexible fuel line at carburetor.

2. Place end of fuel line in a suitable container. Ground container to helicopter and turn fuel valve on.

3. Turn fuel valve off when the container is full and repeat as necessary to complete draining.

4. Attach fuel line to carburetor, torque per Section 1.330, and torque stripe.

1.160 Storage

For long-term (greater than 30 days) storage:

1. Defuel aircraft per Section 1.150.
2. Clean aircraft per Section 8 of R44 Pilot's Operating Handbook.
3. Paint or wax bare metal areas of main and tail rotor blades.
4. Apply suitable non-drying corrosion preventative compound to C166 clutch shaft adjacent to seals (where shaft enters and exits upper sheave).
5. Preserve engine in accordance with Lycoming Service Letter L180 (current revision).
6. Remove battery and periodically check and adjust, as required, battery charge status. Check fluid level and specific gravity of non-sealed batteries.
7. Store aircraft in a protected, dry (dehumidified) environment.
8. Periodically inspect aircraft for corrosion and correct as required.

1.170 Hydraulic Reservoir Filter Replacement

CAUTION

Cleanliness of hydraulic fluid is vital to proper system operation. Use only clean fluid from sealed containers and avoid contamination from dirty funnels, tubing, etc.

1. Remove and discard safety wire from filter cap. Remove filter cap from bottom of hydraulic reservoir.
2. Remove filter and examine. If debris is found, use a magnet to determine if ferrous or non-ferrous.

NOTE

Ferrous debris may indicate pump damage. Replace filter again after one flight hour. If more ferrous debris is found, replace hydraulic pump per Section 8 and flush hydraulic system per Section 1.180.

3. Clean filter cap and replace O-ring packing. Lubricate new O-ring with A257-15 fluid (see Section 1.470).
4. Lubricate O-ring in new filter with A257-15 fluid and install filter in reservoir. Install filter cap, torque per Section 1.330, and safety wire.
5. Adjust reservoir fluid level as required. Install filler-vent and torque per Section 1.330. Safety wiring filler-vent is not required.

1.180 Draining and Flushing Hydraulic System (see Figure 8-1A)

CAUTION

Cleanliness of hydraulic fluid is vital to proper system operation. Use only clean fluid from sealed containers and avoid contamination from dirty funnels, tubing, etc.

NOTE

Drain and flush hydraulic system if oil turns dark, or emits bad odor.

1. Remove reservoir filler-vent.

2. Place a one-liter container for contaminated fluid beneath D500-1 hydraulic pump at main rotor gearbox. Remove caps from pump suction and pressure T-fittings. Allow fluid in reservoir to drain through suction line into container. Pour small amount of clean A257-15 fluid (see Section 1.470) into reservoir to purge suction line. Pressure line will drain in following step when filter cap is removed.

3. Replace hydraulic reservoir filter per Section 1.170.

4. See Figure 1-2A. Connect MT384 (or similar) 0.8-1.2 gpm hydraulic test pump to T-fittings on D500-1 pump. Fittings are different sizes to ensure correct connection.

5. Dispose of drained, contaminated hydraulic fluid. Fill reservoir with A257-15 fluid.

6. Disconnect servo return line at reservoir forward elbow and place end in empty container for contaminated hydraulic fluid. Cap elbow on reservoir assembly (use cap from pump T-fitting).

7. Activate hydraulic test pump and inspect hydraulic system for leakage.

8. Simultaneously fully raise collective and move cyclic fully forward. Then simultaneously fully lower collective and move cyclic fully aft. Monitor reservoir fluid level and fill as required. Repeat procedure until return line fluid into container is clean.

WARNING

Stay clear of moving flight controls. Hydraulic forces can cause injury.

9. Simultaneously fully raise collective and move cyclic fully aft then simultaneously fully lower collective and move cyclic fully forward. Monitor reservoir fluid level and fill as required. Repeat procedure until return line fluid into container is clean.

10. Connect servo return line to reservoir forward elbow. Torque B-nut per Section 1.330 and torque stripe.

11. Bleed hydraulic system per Section 1.190.

12. Remove and inspect filter. If debris is found, repeat drain and flush procedure. If filter is clean, reinstall per Section 1.170, steps 4 & 5.

1.190 Bleeding Hydraulic System (see Figure 1-2A)

1. Disconnect cap on D500-1 hydraulic pump pressure (aft) T-fitting and connect pressure line from MT384 hydraulic test pump (or similar 0.8-1.2 gpm unit). Pressure and suction fittings are different sizes to assure correct connection.

2. Remove reservoir filler-vent and cover hole with finger to prevent fluid loss. Disconnect cap on hydraulic pump suction (forward) T-fitting and connect hydraulic test pump suction line. Fill reservoir as required.

3. Activate hydraulic test pump and inspect for leakage.

4. Simultaneously fully raise collective and move cyclic fully forward then simultaneously fully lower collective and move cyclic fully aft. Repeat procedure ten times.

WARNING

Stay clear of moving flight controls. Hydraulic forces can cause injury.

5. Simultaneously fully raise collective and move cyclic fully aft then simultaneously fully lower collective and move cyclic fully forward. Repeat procedure ten times.

6. Shut off hydraulic test pump. Verify no leaks in hydraulic system.

7. Cover reservoir filler-vent hole with finger to prevent fluid loss. Disconnect hydraulic test pump suction line from D500-1 pump forward T-fitting and install cap. Torque cap per Section 1.330 and torque stripe.

8. Disconnect hydraulic test pump pressure line from D500-1 pump aft T-fitting and install cap. Torque cap per Section 1.330 and torque stripe.

9. Adjust reservoir fluid level as required. Install filler-vent and torque per Section 1.330. Safety wire is not required.

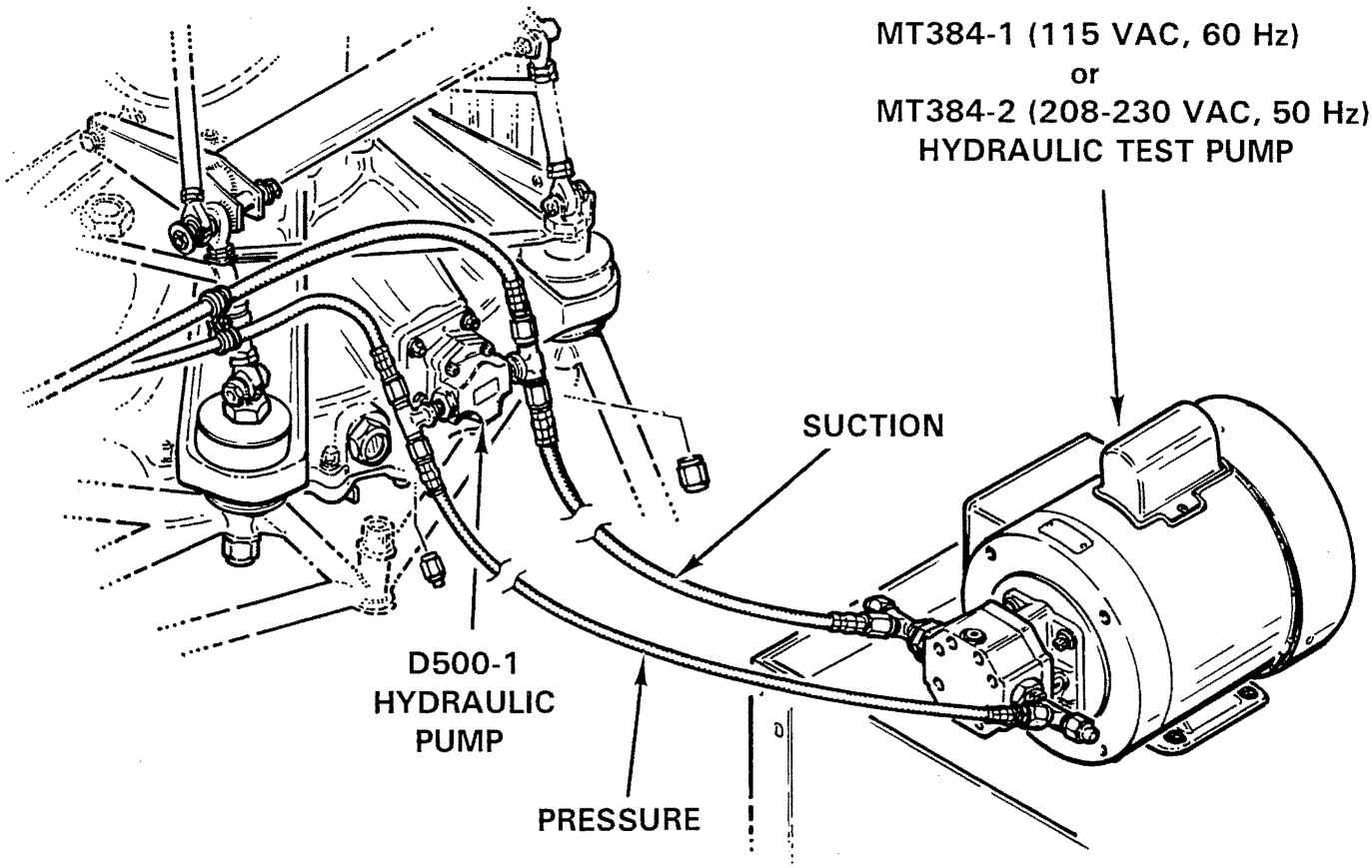

FIGURE 1-2A

MT384 HYDRAULIC TEST PUMP CONNECTION

Intentionally Blank

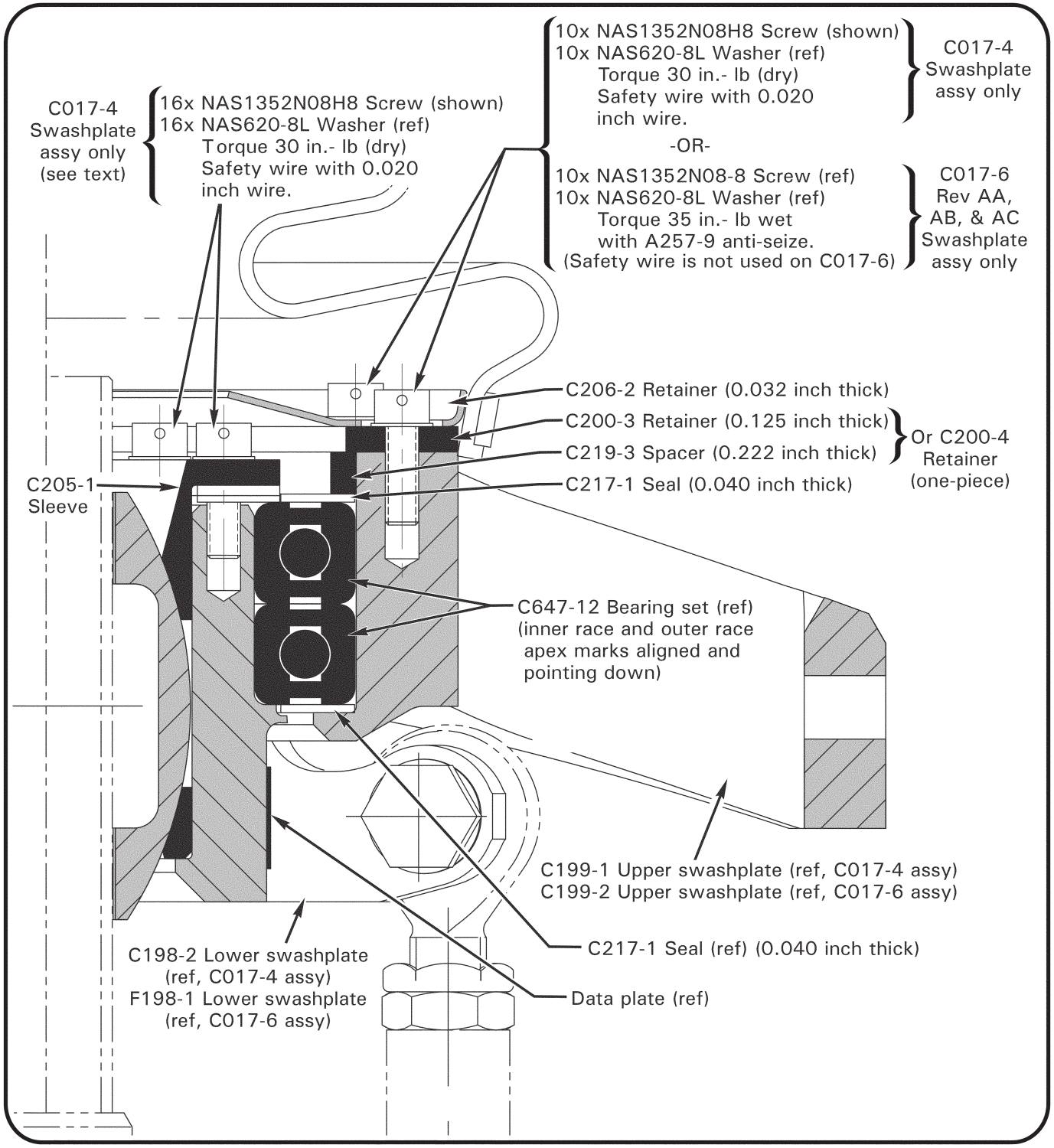

FIGURE 1-2B C017-4 SWASHPLATE ASSEMBLY, AND C017-6 REV AA, AB, & AC SWASHPLATE ASSEMBLY, APPROVED B900-13 MODIFICATION

1.195 Lubrication of Swashplate Bearings

1. a. If swashplate is P/N C017-6 Rev AD or subsequent, proceed to step 2.
   b. If swashplate is P/N C017-4, or is P/N C017-6 Rev AA, AB, or AC, AND
   —"B900-13 MOD" is marked adjacent to swashplate data plate, proceed to step 2.
   —"B900-13 MOD" is NOT marked adjacent to swashplate data plate, install upper C217-1 seal in accordance with R44 Service Letter SL-76A.
2. Remove ty-rap securing C480 boot to upper (rotating) swashplate.
3. Remove hardware securing lower rod ends of both C258 pitch links to upper swashplate. Temporarily secure boot, upper A205 fork, and both pitch links up & away from swashplate.
4. Rotate upper swashplate by hand; if bearing roughness is detected, replace swashplate or submit swashplate to RHC for repair.
5. Refer to Figure 1-2B. Remove (10) NAS1352 screws (with washers) securing C206-2 & C200-3 retainers to upper swashplate. Raise both retainers and C219-3 spacer and either temporarily secure to chord arm (if on helicopter) or set aside (if on workbench).
6. Using a 0.006 inch feeler gage, gently pry up outer edge of upper C217-1 seal and expose top ball bearing.
7. Using a syringe or grease gun, add A257-3 grease into cavity above bearing set until grease is just below top of C205-1 sleeve (approx. 20 ml grease). Do not allow grease into screw holes.
8. Position C217-1 seal atop grease followed by C219-3 spacer, C200-3 retainer, and NAS1352N08-8 screws with NAS620-8L washers. Finger-tighten all screws, then snug any (4) screws that are 90° apart, depressing seal and forcing grease into underlying bearing set. Rotate upper swashplate several revolutions. Wipe off excess grease.
9. Repeat steps 5 thru 8 once, then proceed to step 10.
10. Remove screws & washers and solvent-clean. Raise and clean C200-3 retainer and C219-3 spacer, then reinstall both.
11. Install C206-2 retainer, NAS620-8L washers, and NAS1352N08-8 screws with A257-9 anti-seize. Special torque screws per § 23-33.
12. Connect upper A205 fork rod end and lower rod end of associated C258 pitch link, to interrupter-side swashplate ear; standard torque bolt per § 23-32. Install palnut, standard torque per § 23-32, and torque stripe per Figure 2-1.
13. Attach two A255-3 counterweights, and lower rod end of C258 pitch link, to swashplate ear opposite interrupter; standard torque bolt per § 23-32. Install palnut, standard torque per § 23-32, and torque stripe per Figure 2-1.
14. Verify safety washers (or counterweight) and C115 spacers installed at all rod ends per Figure 2-1.

1.195 Lubrication of Swashplate Bearings (continued)

WARNING

Assembly of flight controls is critical and requires inspection by a qualified person. If a second person is not available, the installer must take a 5-minute break prior to inspecting flight control connections he has assembled.

15. Connect hydraulic test pump as described in § 1.190.
16. Activate test pump. While observing swashplate, have someone fully manipulate cyclic and collective controls. Verify swashplate movement corresponds with cyclic and collective movement, and without interference. With collective full-up, ensure ball is at dimension shown in Figure 10-2.
17. Shut off hydraulic test pump. Disconnect hydraulic test pump as described in § 1.190.
18. Position swashplate boot on upper swashplate and secure with MS3367-6-0 ty-rap.
19. With appropriately rated person at controls, start helicopter, run up to 102% rotor RPM, then shutdown.
20. Remove ty-rap, and raise swashplate boot. Wipe off excess grease from swashplate. Position swashplate boot on upper swashplate and secure with MS3367-6-0 ty-rap.

1.200 HANDLING, JACKING, HOISTING, LEVELING, AND WEIGHING

1.210 Ground Handling

1.211 Ground Handling Wheels Installation

a) Extend the handle by depressing the handle locking pin and sliding the handle out until the pin snaps into the outer hole. Hold handle and wheel with the protruding spindle in its lowest position. Insert spindle into support mounted on skid (see Figure 1-3).

NOTE

If helicopter has not settled on its skids completely, the spindles may not go in all the way. In this case, pull down on the tail cone to spread the gear enough to allow installation.

b) Make sure that the protruding spindle is all the way in with the widened end completely past the inside of the support (see Figure 1-3A).

c) Pull handle over center to raise helicopter and lock wheel in position (see Figure 1-4).

CAUTION

When lowering the helicopter, the handle has a tendency to snap over.

NOTE

70 psi maximum tire inflation pressure.

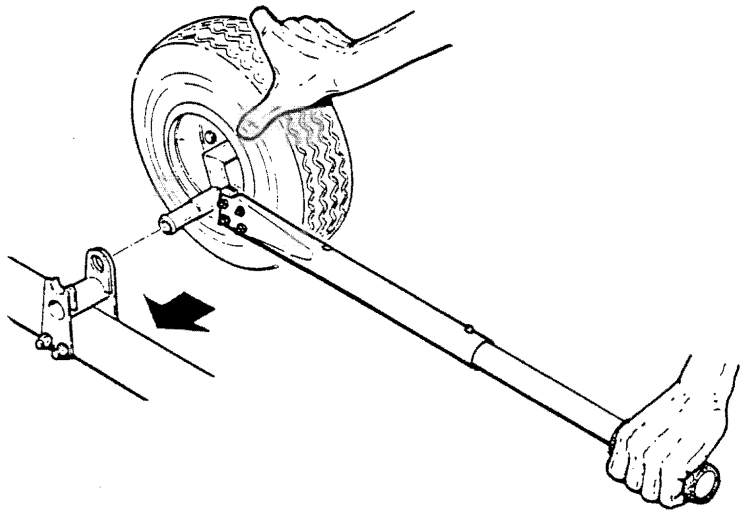

FIGURE 1-3

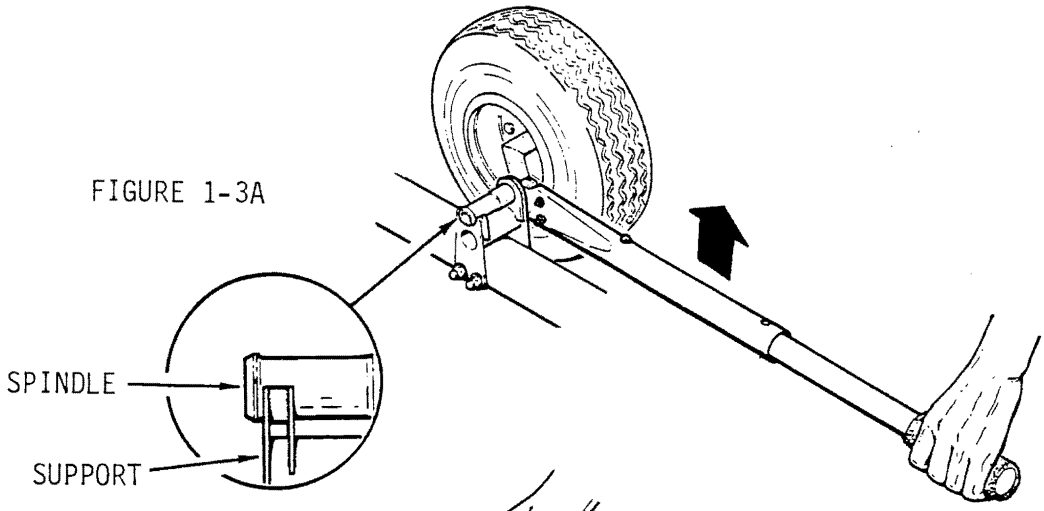

FIGURE 1-3A

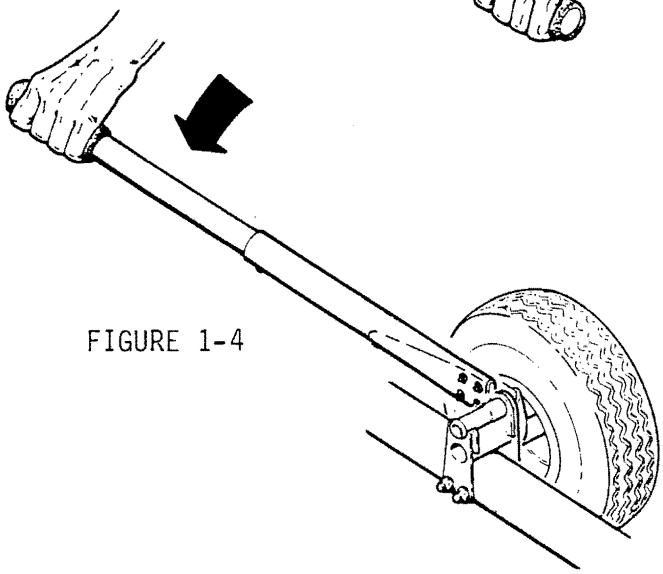

FIGURE 1-4

1.210 Ground Handling (cont'd)

1.212 Ground Handling Wheels - Float Ship Landing Gear

INSTALLATION:

Align aft blocks adjacent to mark on skid tube and position forward blocks to remove cord slack.

a) Pull tail down. Insert forward blocks at their lower height under both skids.

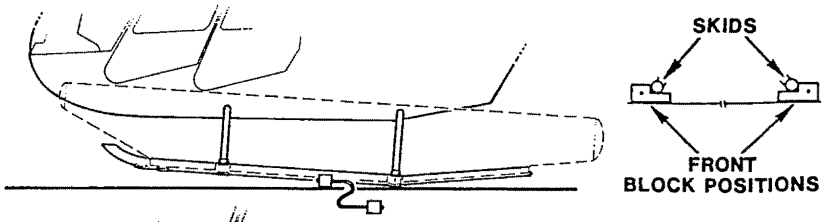

b) Push tail up. Insert rear blocks at their lower height under both skids at marks.

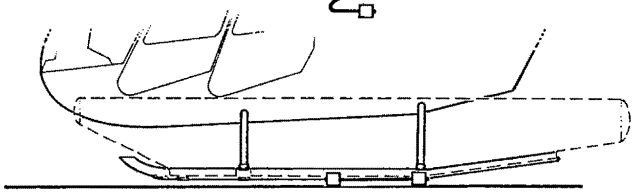

c) Pull tail down. Move forward blocks inward to their upper height under skid tubes.

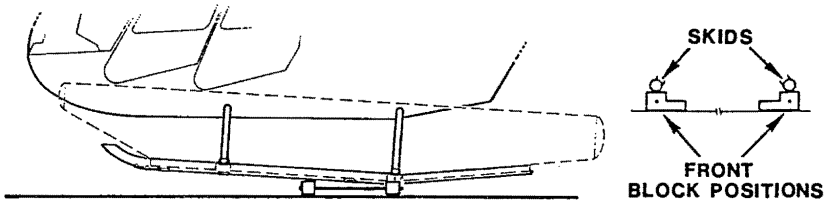

d) Push tail up. Slide rear blocks out (upper height of rear blocks is not used) and insert wheels under skids at rear marks.

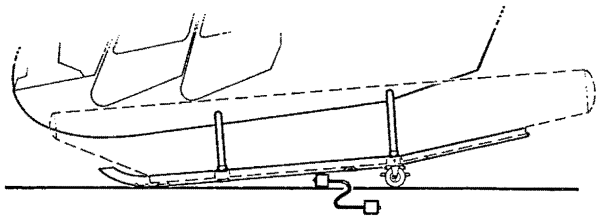

NOTE

Wheels may be placed a few inches forward to reduce force required to pull tail down.

e) Pull tail down and remove forward blocks.

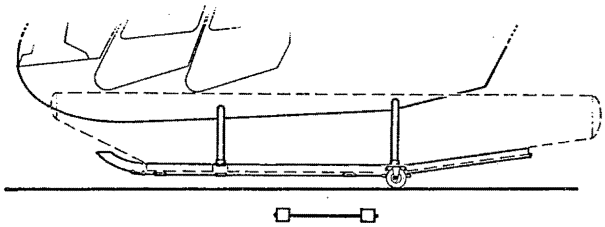

FIGURE 1-3B FLOAT SHIP GROUND HANDLING WHEELS INSTALLATION

1.212 Ground Handling Wheels - Float Ship Landing Gear (cont'd)

REMOVAL:

a) Pull tail down. Insert forward blocks at their upper height at forward marks under skids.

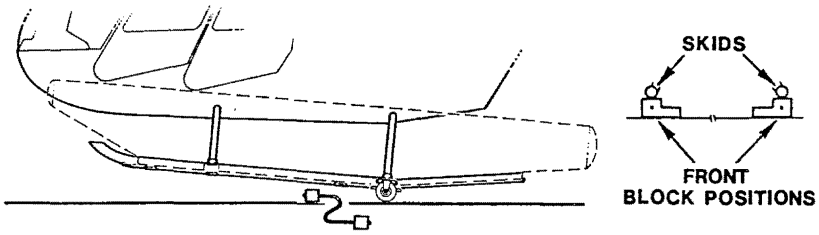

b) Push tail up. Remove wheels and insert rear blocks at their lower height (upper height on rear blocks is not used) at marks.

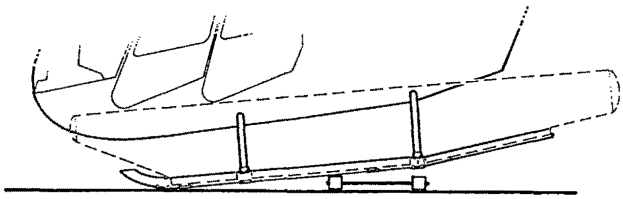

c) Pull tail down. Position forward blocks under skids at their lower height.

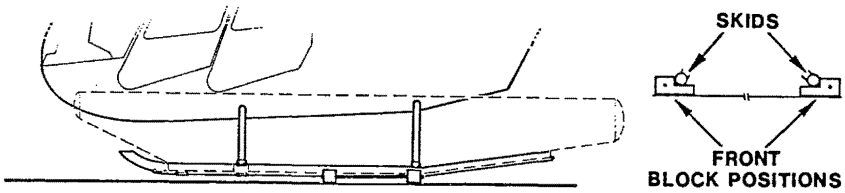

d) Push tail up. Remove rear blocks.

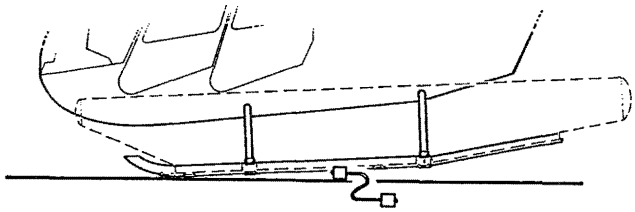

e) Pull tail down. Remove front blocks.

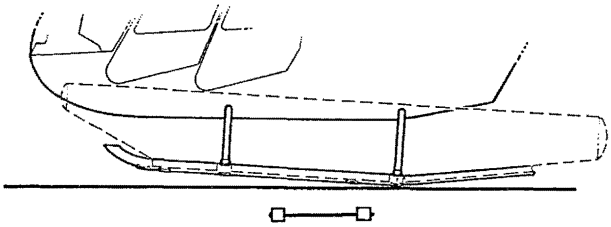

FIGURE 1-3C FLOAT SHIP GROUND WHEELS REMOVAL

1.213 Moving the Helicopter on Ground Handling Wheels

Moving the helicopter on ground handling wheels requires two people: one person to hold the tail down and steer by holding the tail rotor gearbox and another person to push on primary structure. The steel tube frame inside the aft cowl door may be used as a hand hold for pushing. Keep feet clear of skid tubes during ground handling.

CAUTION

Do not move helicopter by gripping tail rotor guard, outboard portion of horizontal stabilizer, tail rotor, or tail rotor controls.

1.214 Main Rotor Blade Tie-Downs

Install MT290-2 main rotor blade tie-downs as shown in Figure 1-5. Tie-down straps are installed by removing slack from lines to prevent blade movement.

CAUTION

Overtightening tie-down straps can damage main rotor blades.

1.215 Parking

Refer to Section 8 of the R44 Pilot's Operating Handbook for parking procedures.

1.216 Trailering

Trailering the R44 is not normally recommended. Most trailers large enough to accomodate the helicopter are designed for much heavier loads; the trailer's springs and shock absorbers will not function properly when lightly-loaded. If trailering is unavoidable the following precautions should be observed:

1. Load trailer with ballast until it is at the average weight it is designed to carry.

2. Support tailcone, taking care to prevent chafing or abrasion at the support point.

3. Remove main rotor blades. If not practical to remove, support the main rotor blades so they will not bear on droop stops. Locate supports about 5 feet in from blade tips. Supports must be cushioned to prevent blade damage.

4. Restrain tail rotor to prevent teetering.

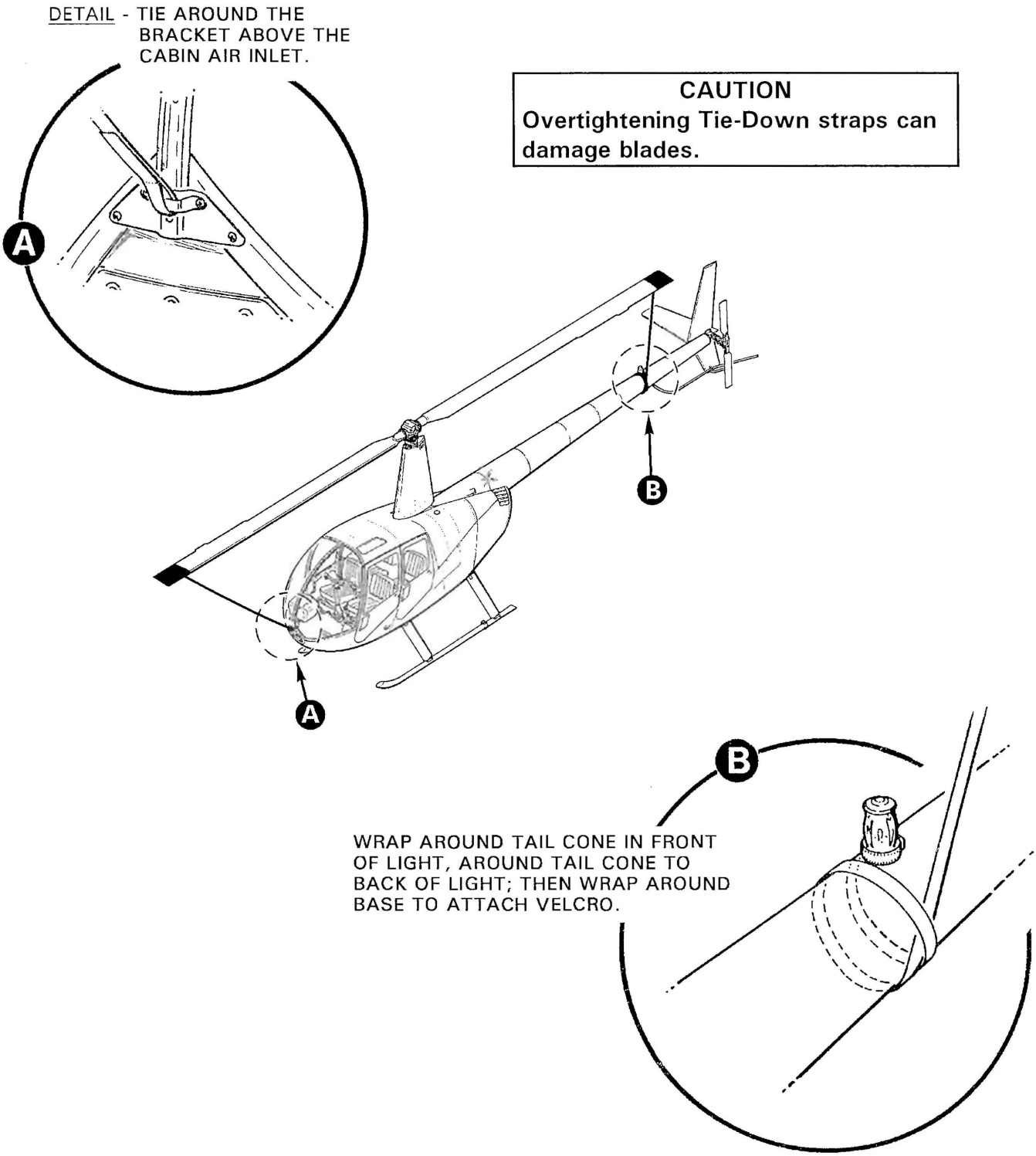

FIGURE 1-5 MAIN ROTOR BLADE TIE-DOWN INSTALLATION

1.216 Trailering (cont'd)

e) Protect helicopter's windshield, tail rotor and other vulnerable parts from highway debris damage.

f) After trailering, thoroughly inspect aircraft for possible damage, with particular attention to the steel tube structure and rotor systems.

1.220 Jacking, Hoisting and Leveling

1. Helicopter jacking is accomplished by placing a jack under each end of the aft cross tube 1 inch inboard of elbow fittings.

> **CAUTION**
>
> Care must be taken to prevent the helicopter from becoming dislodged from jacks.

2. Hoist helicopter using MT527-1 helicopter lifting fixture as shown in Figure 1-6A, or by passing one-inch diameter soft nylon rope through the lightening holes in main rotor hub and forming a double loop per Figure 1-6B. Rope must have a minimum tensile strength of 2,500 lb.

3. Level helicopter using either of the following methods:

   a. Leveling using tailcone and aft landing gear cross tube:

      1) Place a propeller protractor on top of forward bay of tailcone. When tailcone is 0.7 degrees nose down ship is leveled longitudinally.

      2) Level helicopter longitudinally by placing shims under landing gear skid tubes.

      3) Verify aft cross tube is not bent. Place a bubble level in center of aft cross tube.

      4) Level helicopter laterally by placing shims under landing gear skid tubes.

      5) Recheck longitudinal level per steps 1) and 2) above. Repeat steps 1) through 4) as required.

> NOTE
>
> Jacks may be used under aft cross-tube 1 inch inboard from elbows.

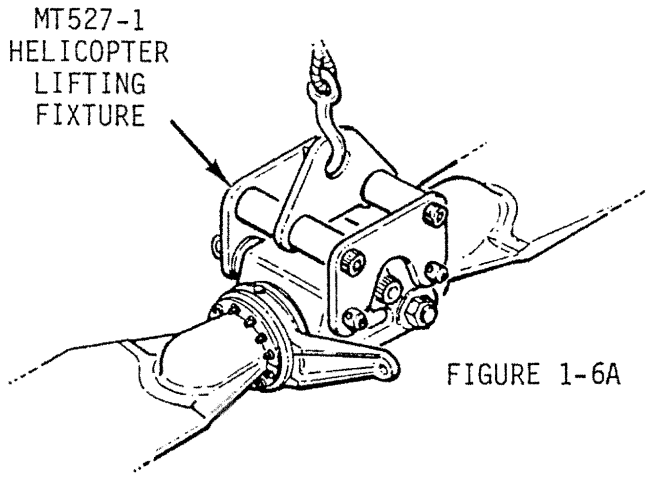

FIGURE 1-6A HELICOPTER HOISTING

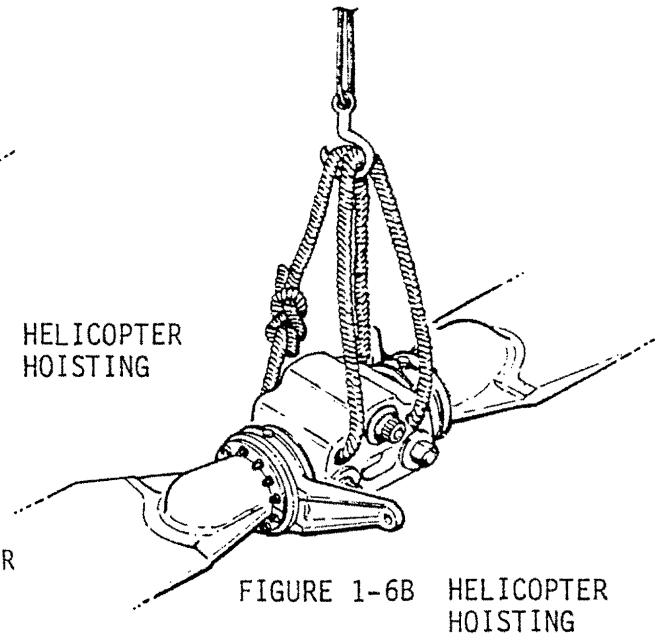

FIGURE 1-6B HELICOPTER HOISTING

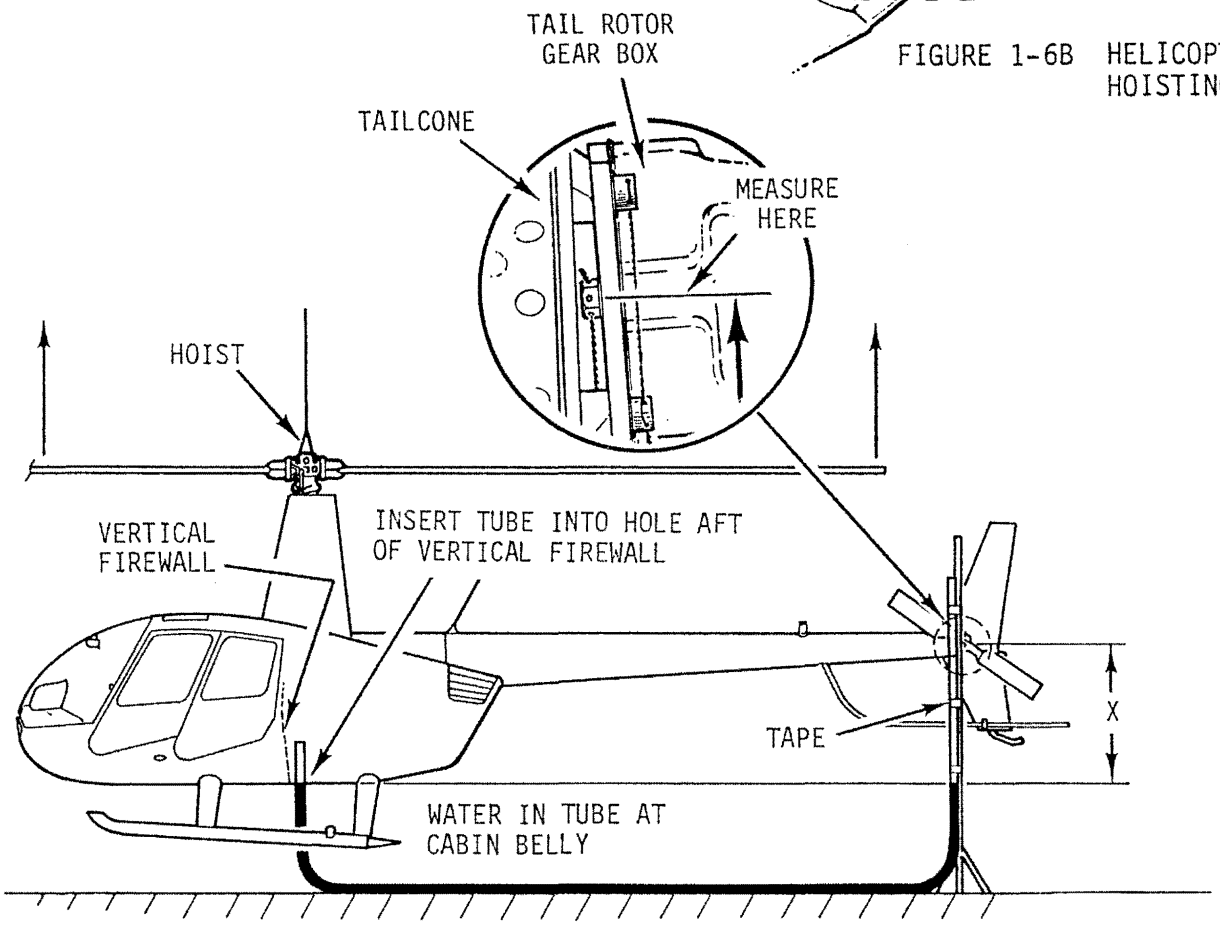

FIGURE 1-7

HELICOPTER C.G. DETERMINATION

1.220 Jacking, Hoisting, and Leveling (cont'd)

b. Leveling at the main rotor hub:

1. Rotate main rotor until teeter hinge bolt is aligned with longitudinal axis of helicopter. Place a bubble level at location marked "level here".

NOTE
Level must be on top of main rotor hub and parallel to teeter hinge bolt.

2. Level helicopter longitudinally by placing shims under landing gear skid tubes.

3. Rotate main rotor until teeter hinge bolt is aligned with lateral axis of helicopter.

4. Level helicopter laterally by placing shims under landing gear skid tubes.

NOTE
Jacks may be used under aft cross tube 1 inch from elbow.

5. Recheck longitudinal level per preceding steps. Repeat steps as required to level helicopter.

1.230 Weighing and C.G. Calculation

> NOTE
>
> The Equipment List/Weight and Balance Data form in the Pilot's Operating Handbook must be used to maintain a continuous record of the helicopter's weight and balance.

> NOTE
>
> Level must be on top of main rotor hub and parallel to teeter hinge bolt.

1.231 Helicopter Weighing Procedure

1. Drain all fuel, including gascolator and both fuel tank sumps.

2. Fill engine oil, hydraulic fluid (if applicable), and gearboxes to full marks.

3. Install and secure all doors.

4. Position main rotor blades fore/aft and approximately level and center cyclic stick.

5. Be sure all checked items on Equipment list/Weight and Balance Data form are installed in their proper locations. Correct form as required.

6. Be sure aircraft is clean and remove any foreign items such as charts, tools or rags.

7. Hoist aircraft per Section 1.220. Have one person hold tail of helicopter while it is being hoisted to stabilize aircraft.

8. With main rotor blades oriented approximately fore and aft, raise both blades off droop stops to allow hub to freely teeter.

9. With aircraft hanging freely and steadily, use a water level and measure difference in vertical height between centerline of tail rotor gearbox and cabin belly at vertical firewall. Refer to Figure 1-7.

   Record height difference to nearest tenth of inch: _____ inches (no ballast)

1.231 Helicopter Weighing Procedure (cont'd)

10. Determine uncorrected longitudinal center of gravity:

114.34 – [0.32 x (difference in height, from Step 9)] = _____ inches

11. Place a 1000-pound capacity scale under each skid. Locate center of scales approximately six inches forward of ground handling wheel mount centerline.

12. Lower aircraft until it rests entirely on scales. Aircraft must be well balanced on scales before releasing tail. Be sure aircraft is level laterally by placing level on center of aft landing gear cross tube.

13. Determine uncorrected empty weight:

Right Scale indication		_____	lb
plus Left Scale indication	+	_____	lb
minus Tare (such as lifting fixture, if installed)	–	_____	lb
Uncorrected Empty Weight	=	_____	lb

14. Determine CG with full fuel and 150 lb pilot:

$$\frac{[(\text{CG from Step 10}) \times (\text{empty weight from Step 13})] + 38840}{(\text{empty weight from Step 13}) + 451.2} = \_\_\_\_\_ \text{ inches}$$

15. If CG from Step 14 is greater than 102.5 inches, determine required nose ballast as follows:

$$\frac{[(\text{CG from Step 10} - 102.5) \times (\text{empty weight from Step 13})] - 7408}{95.5} = \_\_\_\_\_ \text{ lb}$$

Round ballast weight up to nearest 0.25 lb and install nose ballast per Section 1.240.

Record actual nose ballast installed: _____ lb

Repeat steps 7 thru 15 and revise measurements and calculations.

1.231 Helicopter Weighing Procedure (cont'd)

16. Adjust weight and balance to correct for drained unusable fuel:

ITEM	WEIGHT (lb)		CG (inches from datum)		MOMENT (in.-lb)
Ship as weighed	_____ (from Step 13)	X	_____ (from Step 10)	=	_____
Add unusable fuel	+7.2	X	96.0	=	+691
Helicopter basic empty weight and CG (includes unusable fuel and full oil)	_____	X	_____ *	=	_____

*CG location (arm) is determined by dividing total moment by total weight.

Datum is located 100 inches forward of main rotor centerline

CAUTION

Following any modification which moves empty CG aft, calculate weight and balance with 150 lb pilot and full fuel. If calculation shows CG aft of aft limit, fixed ballast must be installed in nose to comply with minimum solo pilot weight limitation in Section 2 of the Pilot's Operating Handbook.

17. Determine lateral center of gravity using step 13 data:

$$\text{Lateral C G Arm} = \frac{(\text{Right Scale} - \text{Left Scale})}{(\text{Right Scale} + \text{Left Scale})} \times 41.20 = \_\_\_\_\_ \text{ inch}$$

1.240 Fixed Ballast Installation

1. Remove screws securing upper console and open console.

2. Remove landing light retainer and landing lights.

3. If required by Section 1.231, install appropriate ballast per Figure 1-8, 1-8A, or 1-8B, as applicable.

NOTE
Maximum allowable ballast is 10 pounds.

4. Torque bolts per Section 1.320 and torque stripe per Figure 2-1.

5. Close and secure upper console.

6. Reinstall landing lights and retainer. Function check landing lights.

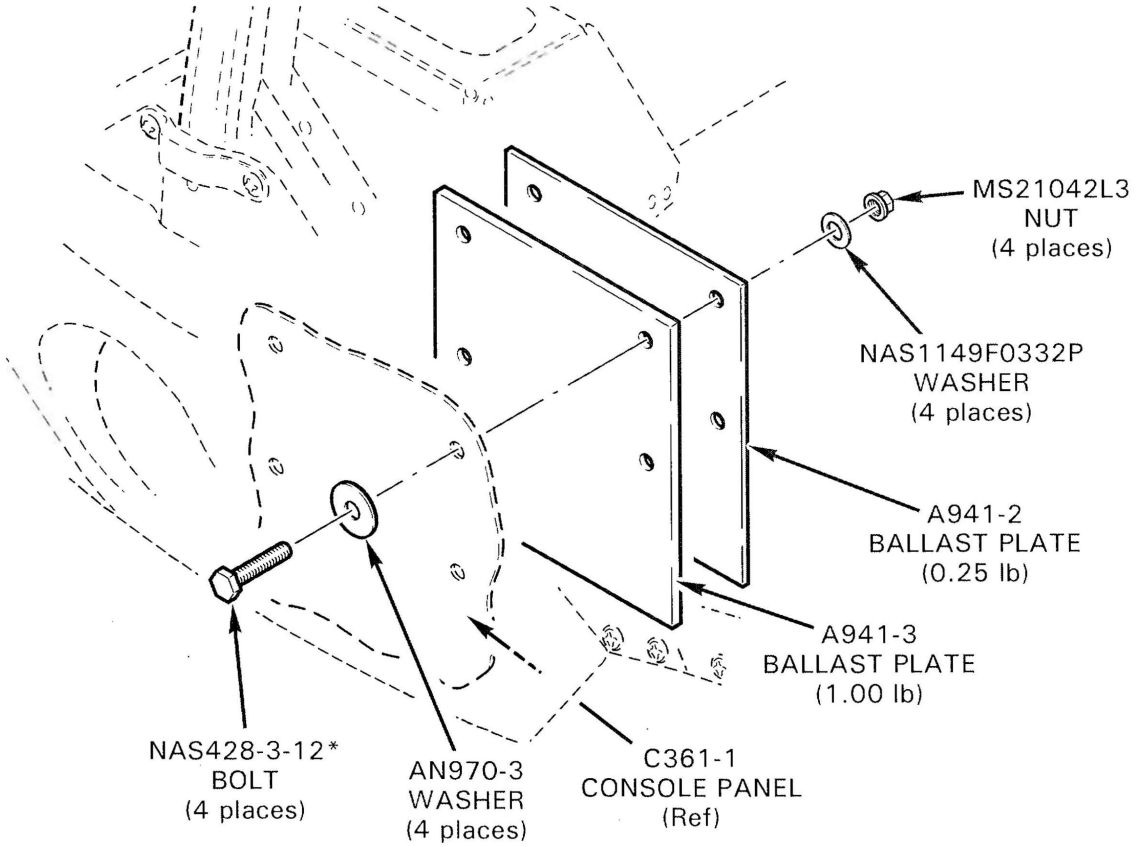

*2 threads minimum beyond nut.

FIGURE 1-8 FIXED BALLAST INSTALLATION
(with 4-hole ballast plates)

1.240 Fixed Ballast Installation (cont'd)

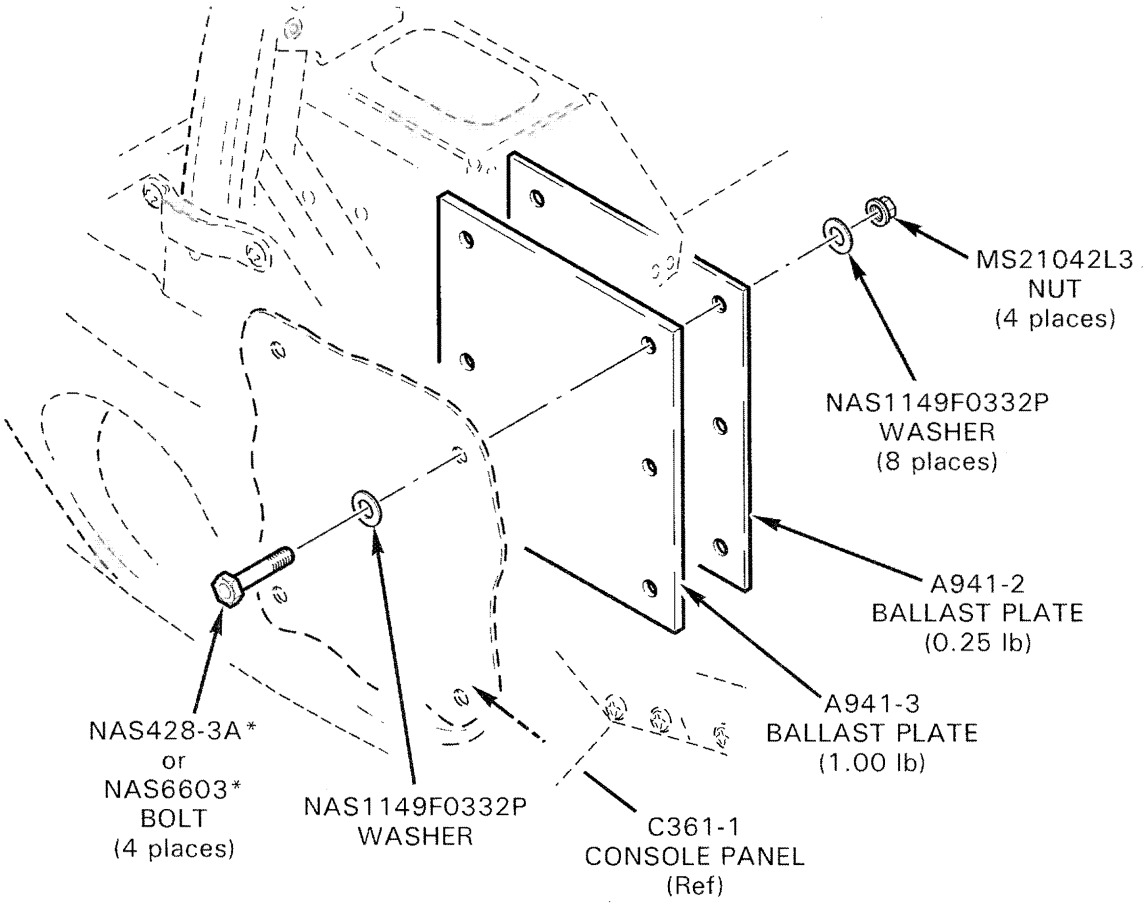

*Select NAS428-3A bolt length as required for 2 threads minimum beyond nut.
Select NAS6603 bolt length as required for 2 to 4 threads beyond nut.

FIGURE 1-8A FIXED BALLAST INSTALLATION
(with 6-hole ballast plates)

1.240 Fixed Ballast Installation (continued)

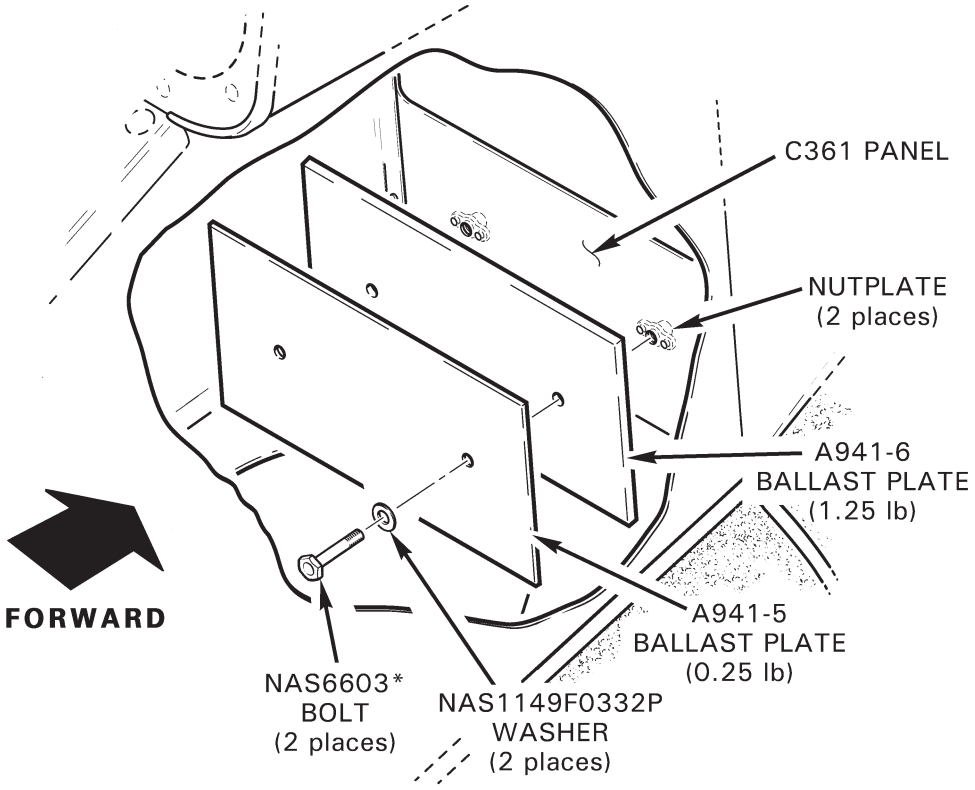

*Bolt length as required for 2-4 threads beyond nutplate.

FIGURE 1-8B FIXED BALLAST INSTALLATION
(with 2-hole ballast plates, required with H.I.D. landing lights)

1.300 Fastener Torque Requirements

Fastener torque requirement information has been moved to Chapter 23.

Standard torques, previously located in § 1.320, are now located in § 23-32.

Special torques, previously located in § 1.330, are now located in § 23-33.

1.400 Approved Materials

Approval materials information has been moved to Chapter 23.

1.500 (Reserved)

1.600 Part Interchangeability

Refer to R44 Illustrated Parts Catalog for part interchangeability information (ref. § 23-81).

1.700 Assembly Instructions for R44-series Helicopter Crated for Export

> NOTE
>
> Aircraft assembly to be performed by a certificated mechanic.

1. Remove top of cabin assembly crate. Remove wall marked "A" by removing lag bolts painted black. Remove empennage assembly. Remove remaining walls. Remove all parts, except cabin assembly, from crate base. Open main rotor blade and tailcone crate.
2. Reinstall main rotor hub per § 28-20.
3. Assemble landing gear per applicable sections in Chapter 5.

> NOTE
>
> Do not install strut fairings at this time.

4. Attach a hoist to main rotor hub per § 1.220. Lift aft end of crate while at same time taking up slack in hoist. When helicopter belly is in a horizontal position, lift with hoist until cabin is supported by hoist alone. Remove lag screws and carriage bolts attaching helicopter cabin to crate. Remove crate.

> **CAUTION**
>
> Do not lift helicopter and attached crate using main rotor hub; damage to main rotor gearbox and frames could result.

5. Remove supports from landing gear attachment points and install assembled landing gear per § 5.120 or Chapter 5 (float landing gear). Install front cross tube cover panel. If desired, install strut fairings per § 5.420 (not applicable to utility float landing gear).
6. Remove tailcone cowling and install tailcone per § 4.300. Install strobe light. Install communication, Loran, and GPS antennas (if equipped). Install tailcone cowling.

> **CAUTION**
>
> Make sure all foam packing material is removed from inside of tailcone before installation; damage to tail rotor drive shaft could result.

7. Install empennage assembly per § 4.400. Install tail rotor guard per § 4.430.
8. Fill tail gearbox to center of sight gage using correct gearbox oil (refer to R44 Service Letter SL-73). Rotate rotor system by hand for several revolutions. Check gearbox oil level and adjust as required; install filler-plug and special torque per § 23-33.
9. Install tail rotor per § 30-10. Match color coded markings on blades with pitch links.

1.700 Assembly Instructions for R44-series Helicopter Crated for Export (continued)

10. Install fan and scroll per § 6.220.
11. Install engine exhaust per § 6.520.
12. Install main rotor blades per § 28-10. Match color-coded markings on blades with markings on hub and pitch links.
13. Perform tail rotor drive shaft runout per § 7.340.
14. Fill main gearbox to center of sight gage using correct gearbox oil (refer to R44 Service Letter SL-73). Rotate rotor system by hand for several revolutions. Check gearbox oil level and adjust as required; install filler-plug and special torque per § 23-33.
15. Fuel helicopter and drain a small amount of fuel through gascolator.
16. If ship is equipped with attitude horizon, directional gyro, turn coordinator, and/or vertical card magnetic compass, install as follows:

Attitude Horizon, Direction Gyro, and Turn Coordinator:

Remove warning lights from lower console. Pull out B197 instrument face by removing six (6) securing screws.

> NOTE
>
> Place a piece of foam under B197-1 face to prevent scratching lower face.

Install required instrument(s) by securing with hardware provided.

> **CAUTION**
>
> Directional gyro mount screws must not exceed 1 inch in length or unit will be damaged.

Connect existing straight connector(s) to directional gyro and/or turn coordinator. Connect angle connector to attitude horizon, ensuring strain relief points down. Ensure connectors lock in place. Ty-rap excess wiring. Reinstall B197-1 face to console. Reinstall amber FUEL FILTER (IO-540 only), AUX FUEL PUMP (IO-540 only), ALT, & GOV OFF lights and red ENG FIRE & OIL warning lights.

Vertical Card Magnetic Compass:

Remove vertical card compass from foam-protected box. Install a 2-inch length of B158-3 heat-shrink tubing over each compass wiring pin. Locate existing wires from windshield center bow. Connect pins from compass to existing sockets (polarity is not critical), cover connection with heat-shrink, then apply heat. Secure compass in mount with four screws and hide and secure wiring atop compass.

1.700 Assembly Instructions for R44-series Helicopter Crated for Export (continued)

17. Install battery (negative ground system).
18. Remove plastic dehydrator plugs from each cylinder's upper spark plug hole.
19. Lubricate provided upper spark plugs threads with A257-16 oil, install, and torque per § 23-33.
20. Connect ignition leads to upper spark plugs and install spark plug access covers.
21. Disconnect ignition leads from lower spark plugs and remove lower spark plugs.
22. Place a small container under each cylinder's lower spark plug hole. With ignition switch in the OFF position, rotate engine by hand, several revolutions, to force excess preservation oil from cylinders.
23. Temporarily connect a grounding wire from each magneto's primary lead terminal to airframe ground.
24. Activate starter for no more than 12 seconds or until oil pressure is indicated on gage, whichever comes first. Allow starter to cool for 5 minutes after each activation.
25. After oil pressure is indicated remove temporary grounding wire from each magneto.
26. Lubricate lower spark plug threads with A257-16 oil, install, and torque per § 23-33.
27. Connect ignition leads to lower spark plugs.
28. Install belly, left, right, and aft cowling assemblies.
29 Perform § 2.205 ground check.
30. Perform § 2.210 run-up.

1.700 Assembly Instructions for R44-series Helicopter Crated for Export (continued)

NOTE

IO-540 engines should idle at 58-62% rpm with engine warm, clutch engaged.

IO-540 IDLE ADJUSTMENT PROCEDURE

Idle rpm and mixture were set for sea-level standard conditions during factory flight test. If idle and off-idle throttle performance are not satisfactory upon reassembly, adjust as follows:

First set idle rpm to 58-62% rpm with engine warm & clutch engaged. Then, with engine off, disconnect fuel control outlet hose, connect test hose if desired, and measure fuel flow rate at fuel control outlet with mixture full rich, throttle at idle, and electric fuel pump on (ignition key to PRIME position). Adjust idle mixture as required to obtain 16-18 pounds/hour fuel flow (170-190 cc/minute). Clockwise rotation of idle mixture adjustment wheel (viewed from aircraft right side) enriches mixture. Re-check idle rpm after mixture adjustment and repeat as required until both rpm and mixture are within limits. With rpm and mixture set, verify smooth acceleration from idle to 102% rpm with no engine hesitation or smoke from tailpipe. Also verify smooth needle split from 102% to idle with no engine roughness or erratic rpm indications and acceptable idle quality. Note that 16-18 pounds/hour fuel flow should produce acceptable idle quality and off-idle throttle performance under sea-level standard conditions. Richer mixtures may be required for cold temperature operation and leaner mixtures may be required for hot/high altitude operation. Deviate from 16-18 lb/hr recommendation as required for acceptable idle quality and off-idle throttle performance (smooth accelerations and needle splits).

1.700 Assembly Instructions for R44-series Helicopter Crated for Export (continued)

> NOTE
>
> Flight checks to be performed by a qualified pilot and certificated mechanic.

1. Perform preflight inspection per the applicable Pilot's Operating Handbook.
2. Balance fanwheel per § 6.240.
3. Balance tail rotor per § 10.240.
4. Perform hover checks per § 2.220 Step 1. DO NOT proceed into forward flight at this time.
5. Track and balance main rotor per § 10.200.
6. After completing track and balance, adjust autorotation RPM per § 10.250. Avoid rotor overspeeds by avoiding higher gross weights and higher altitudes during autorotation checks.
7. While climbing at Maximum Continuous Power (MCP), 60 KIAS, and governor on:
   a. Evaluate roughness and controllability.
   b. Perform 30 degree left yaw to check for adequate directional control.
8. Level flight at typical cruise altitude (deviate as required for weather and terrain), MCP, and governor on, evaluate the following:
   a. Longitudinal and lateral cyclic control forces.
   b. Collective control forces.
9. Evaluate roughness at MCP and 130 straight and level flight.
10. Check all instruments, gauges, and avionics for proper operation.
11. During autorotation at 50 KIAS and 90% RPM, perform a 30 degree right yaw to check for adequate directional control.

Intentionally Blank