CHAPTER 14

ELECTRICAL AND AVIONICS SYSTEMS

Section	Title	Page
14.000	Electrical and Avionics Systems	14.1
14.600	Electrical Systems Schematics	14.12
14.800	Avionics Schematics	14.25
14.900	Upper Console Harness Plugs	14.41
14.1000	IFR Trainer	14.43
14.1010	IFR Trainer Component Loads	14.43
14.1020	IFR Trainer Console Access	14.45
14.1030	IFR Trainer Component Location	14.46
14.1040	IFR Trainer Avionics Schematics	14.47
14.1100	R22 Mariner Avionics Schematics	14.60

Intentionally Blank

CHAPTER 14

ELECTRICAL AND AVIONICS SYSTEMS

14.000 Electrical and Avionics Systems

Electrical System information has been moved to Chapter 33.

Avionics System information has been moved to Chapter 34.

[Pages 14.3 thru 14.11A have been deleted, are no longer effective, and should be discarded.]

Intentionally Blank

Intentionally Blank

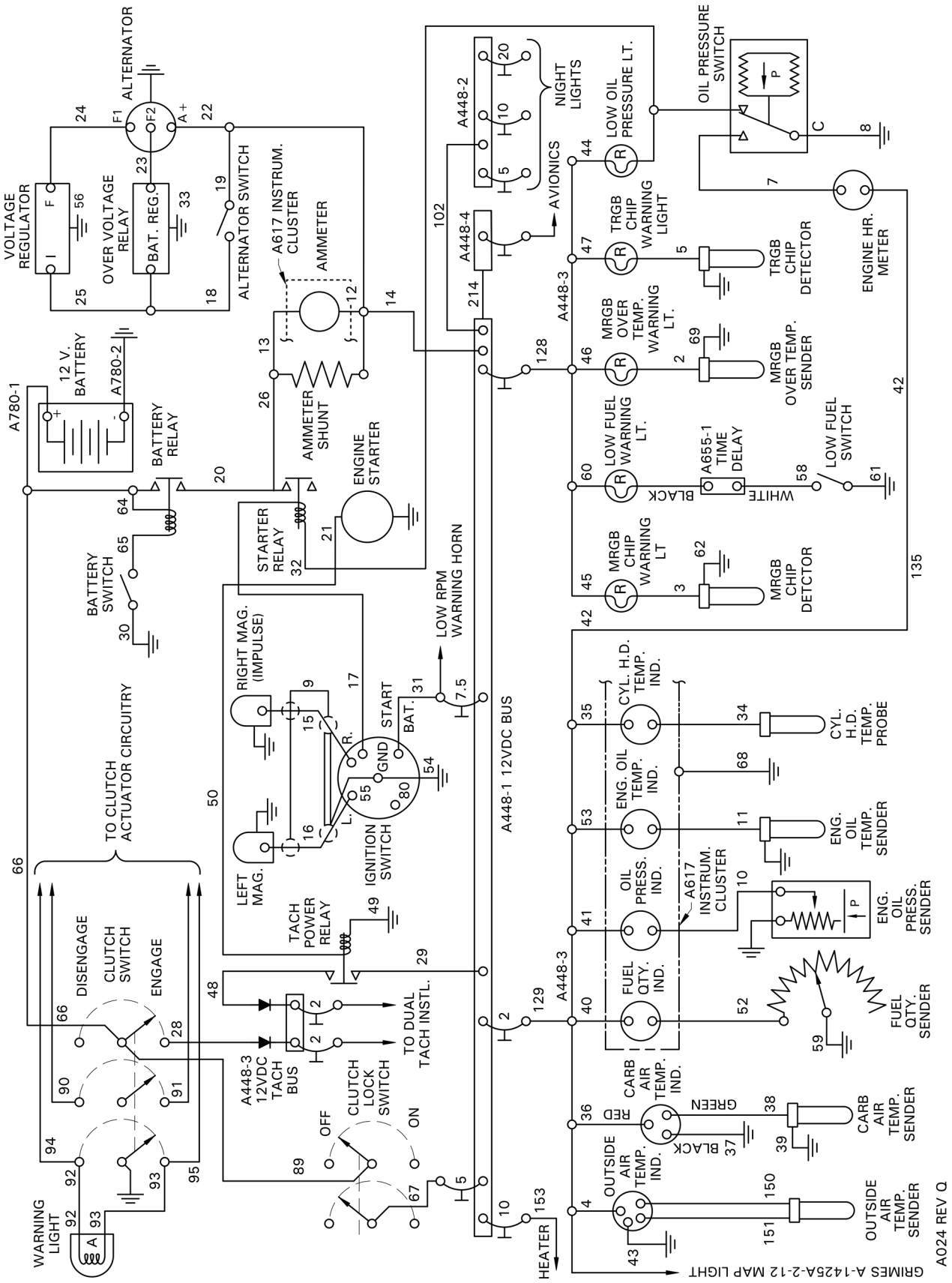

FIGURE 14-1 ELECTRICAL SYSTEM SCHEMATIC (S/N 0001 thru 0077)
(Impulse coupling ignition; 9/21/79 thru 12/1/80)

14.600 (cont'd)

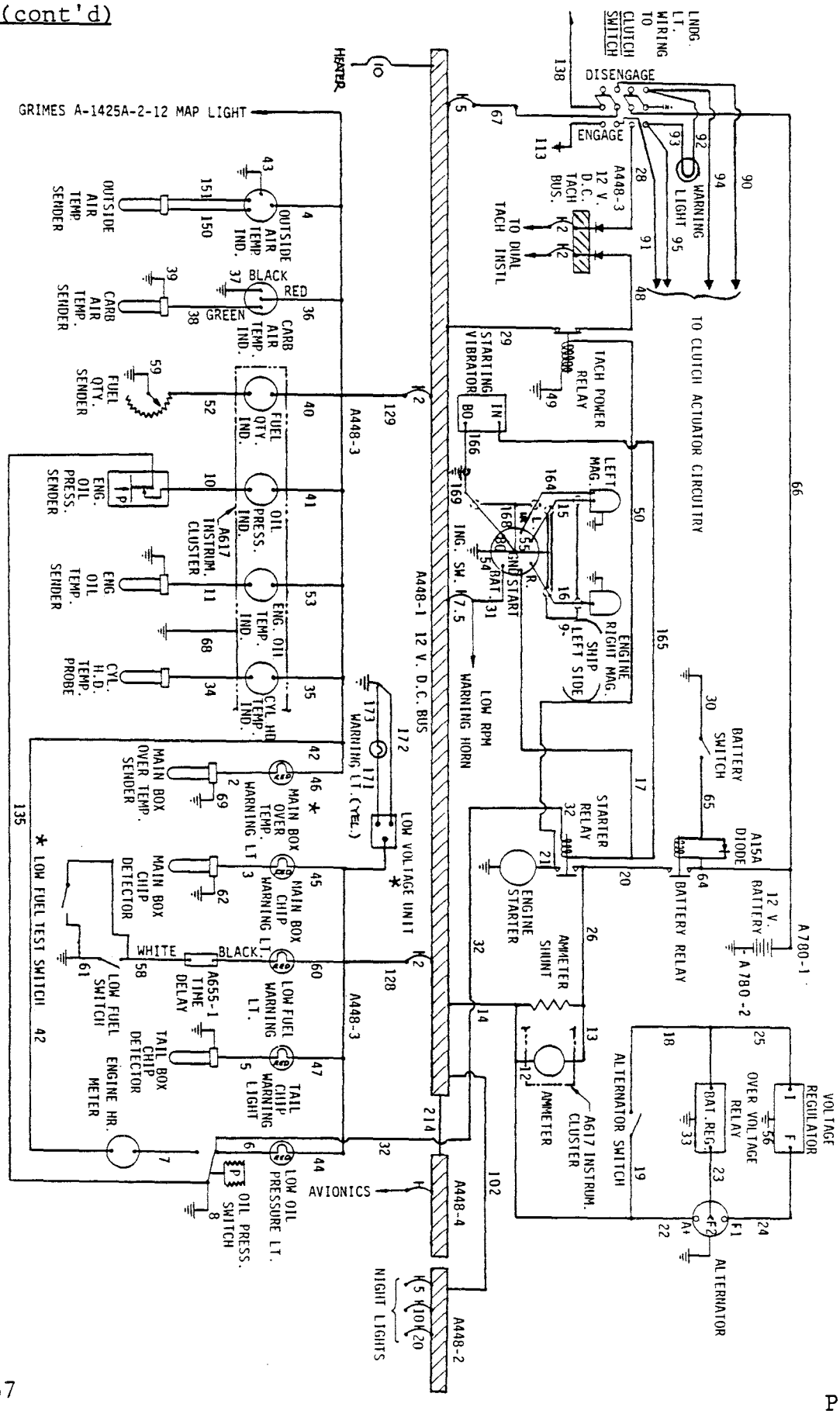

ELECTRICAL SYSTEM SCHEMATIC (S/N 078 THRU 324)(12/9/80 THRU 1/10/83)
(IGNITION VIBRATOR) *These changes added to some A/C Ser.# in this series
FIGURE 14-2 See Page 14.15 Schematic

14.600 (cont'd)

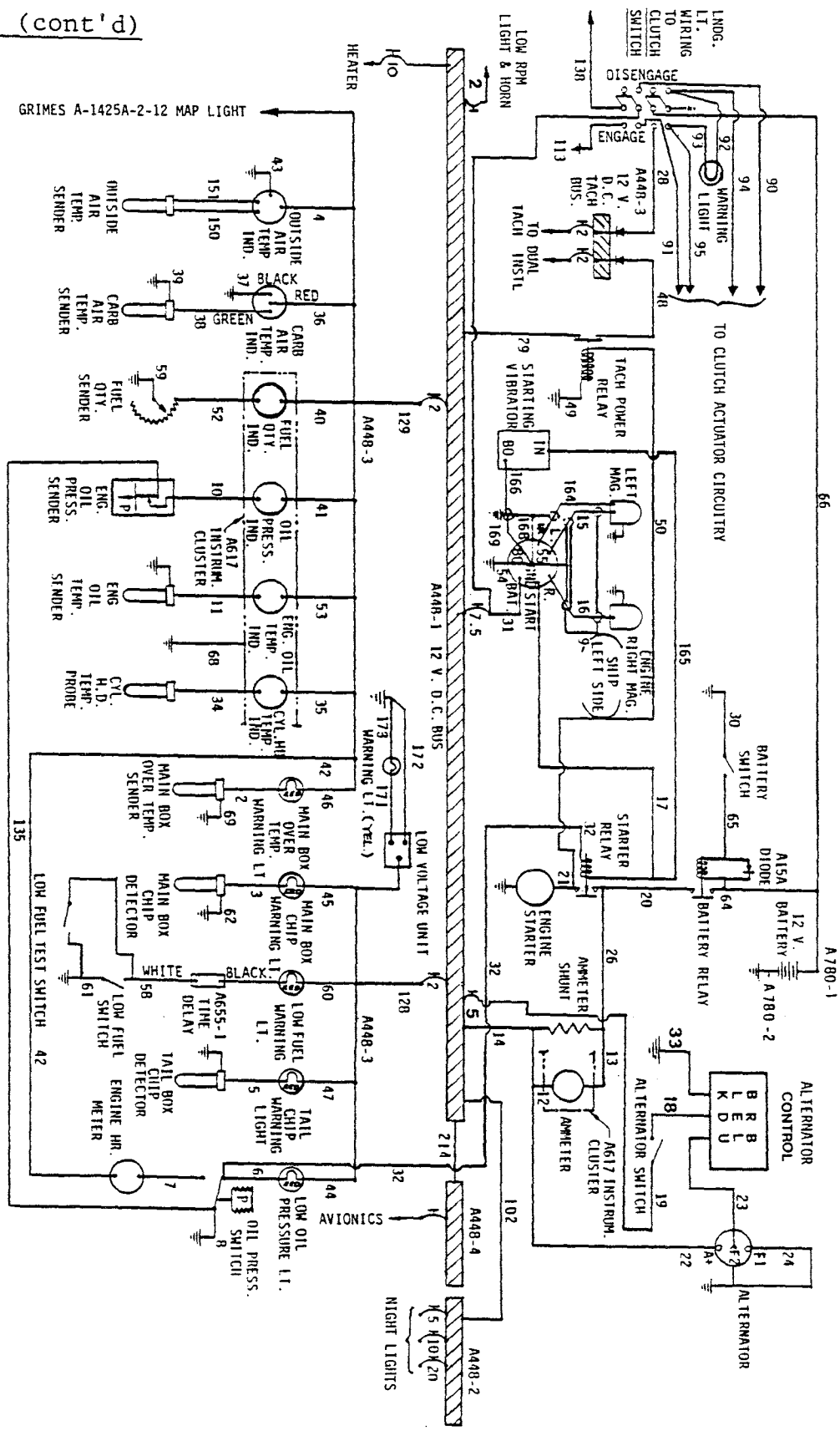

ELECTRICAL SYSTEM SCHEMATIC (S/N 324 THRU 363)(1/10/83 THRU 8/23/83)
(IGNITION VIBRATOR)
FIGURE 14-2A

14.600 (cont'd)

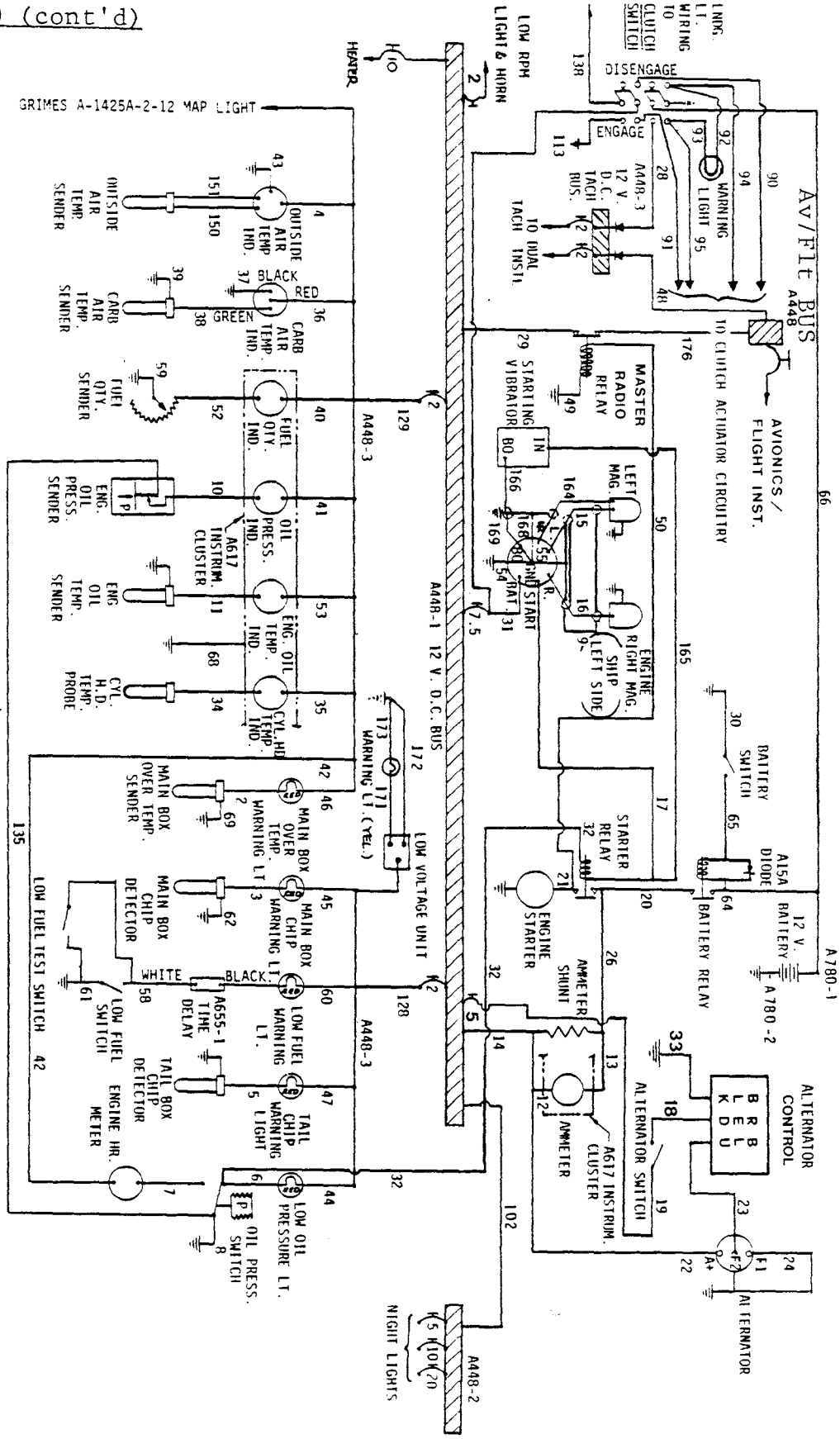

ELECTRICAL SYSTEM SCHEMATIC (S/N 350,351,357-361,& 364 THRU 411)
(IGNITION VIBRATOR) R22 ALPHA
FIGURE 14-2B (8/4/83 THRU 5/18/84)

14.600 (cont'd)

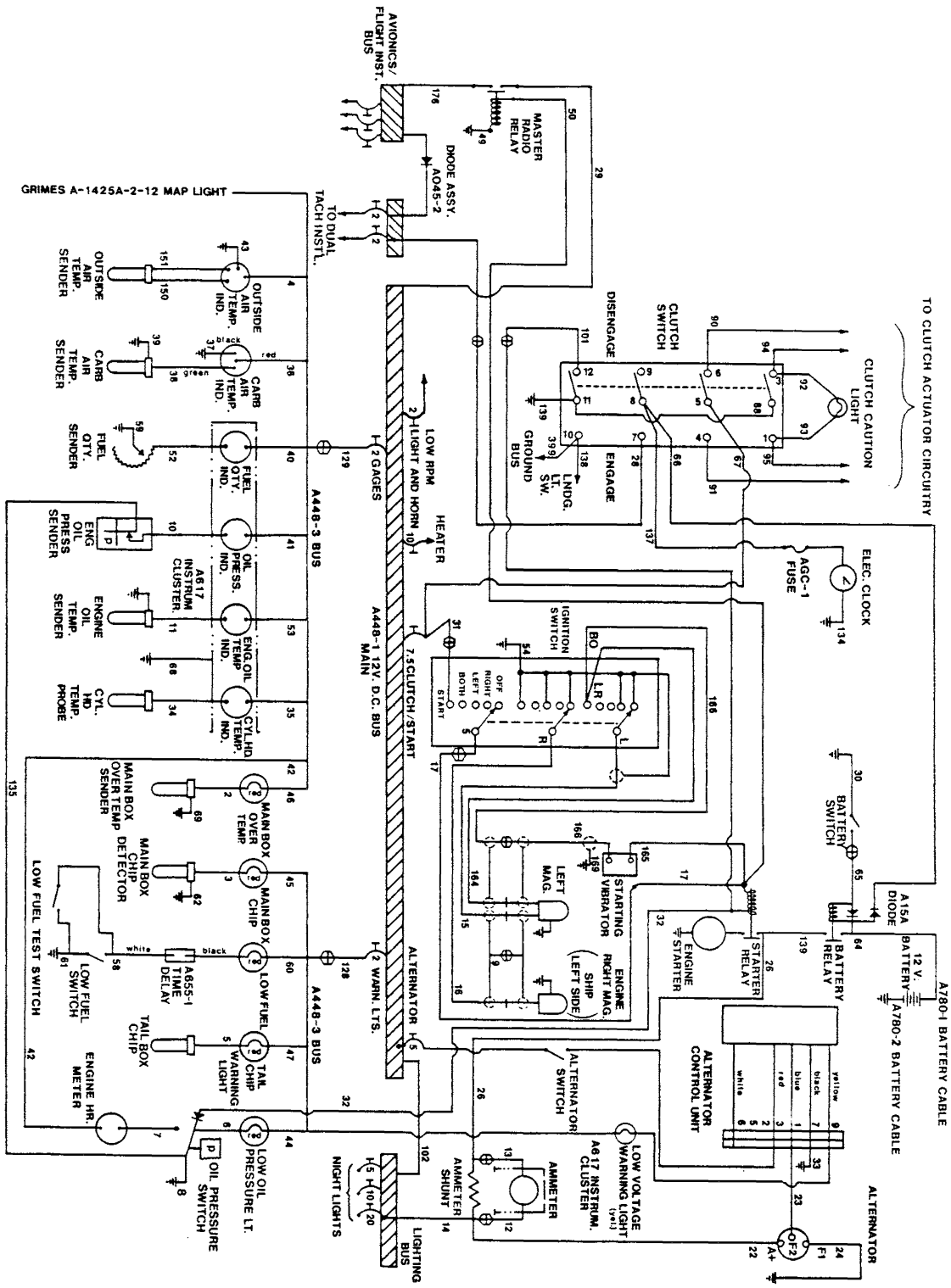

ELECTRICAL SYSTEM SCHEMATIC (S/N 412 thru 443)
(IGNITION VIBRATOR) (5/18/84 thru 10/1/84)
FIGURE 14-2C

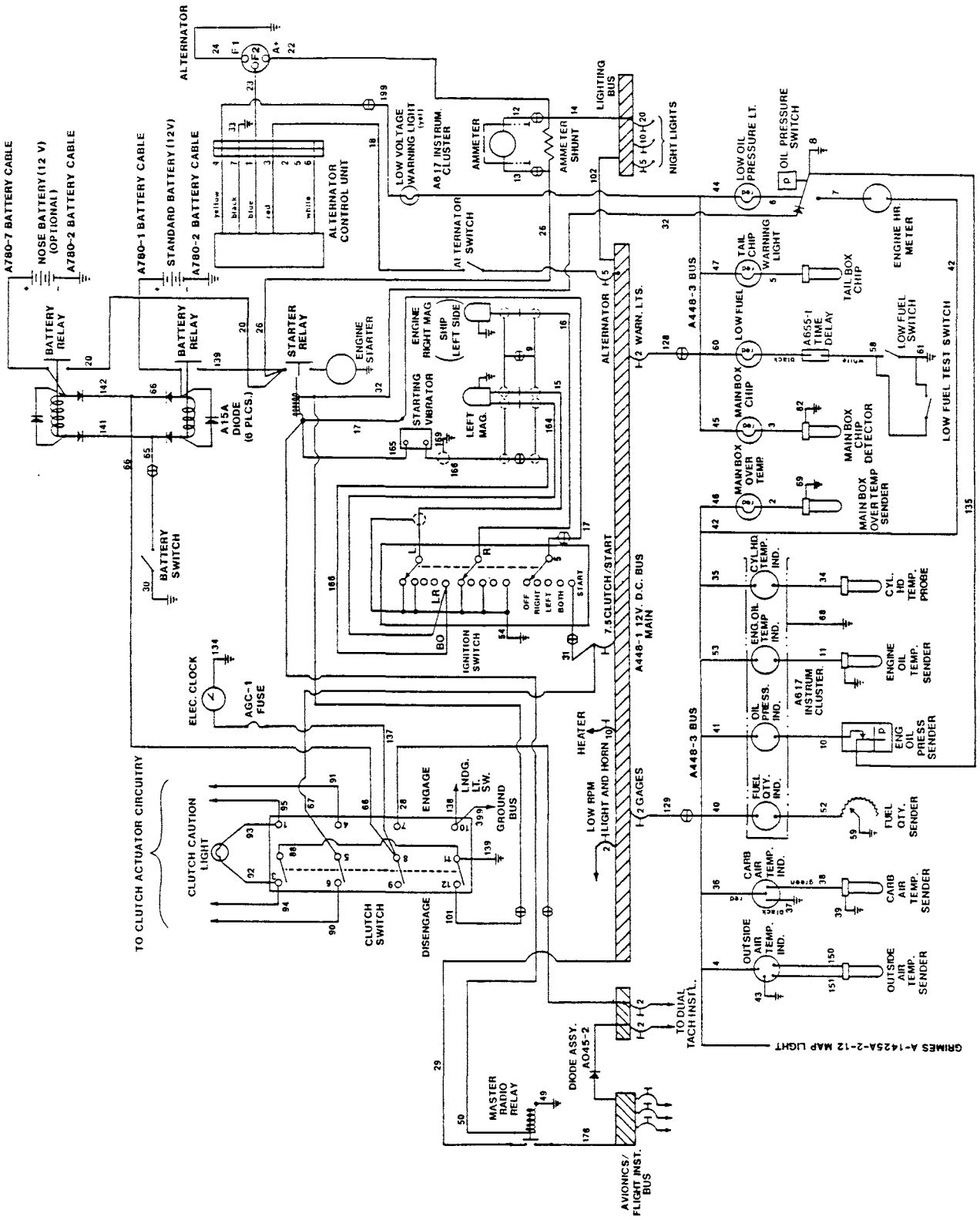

FIGURE 14-2D ELECTRICAL SYSTEM SCHEMATIC - DUAL BATTERY PROVISION (IGNITION VIBRATOR) (5/18/84 thru 10/1/84)

14.600 (cont'd)

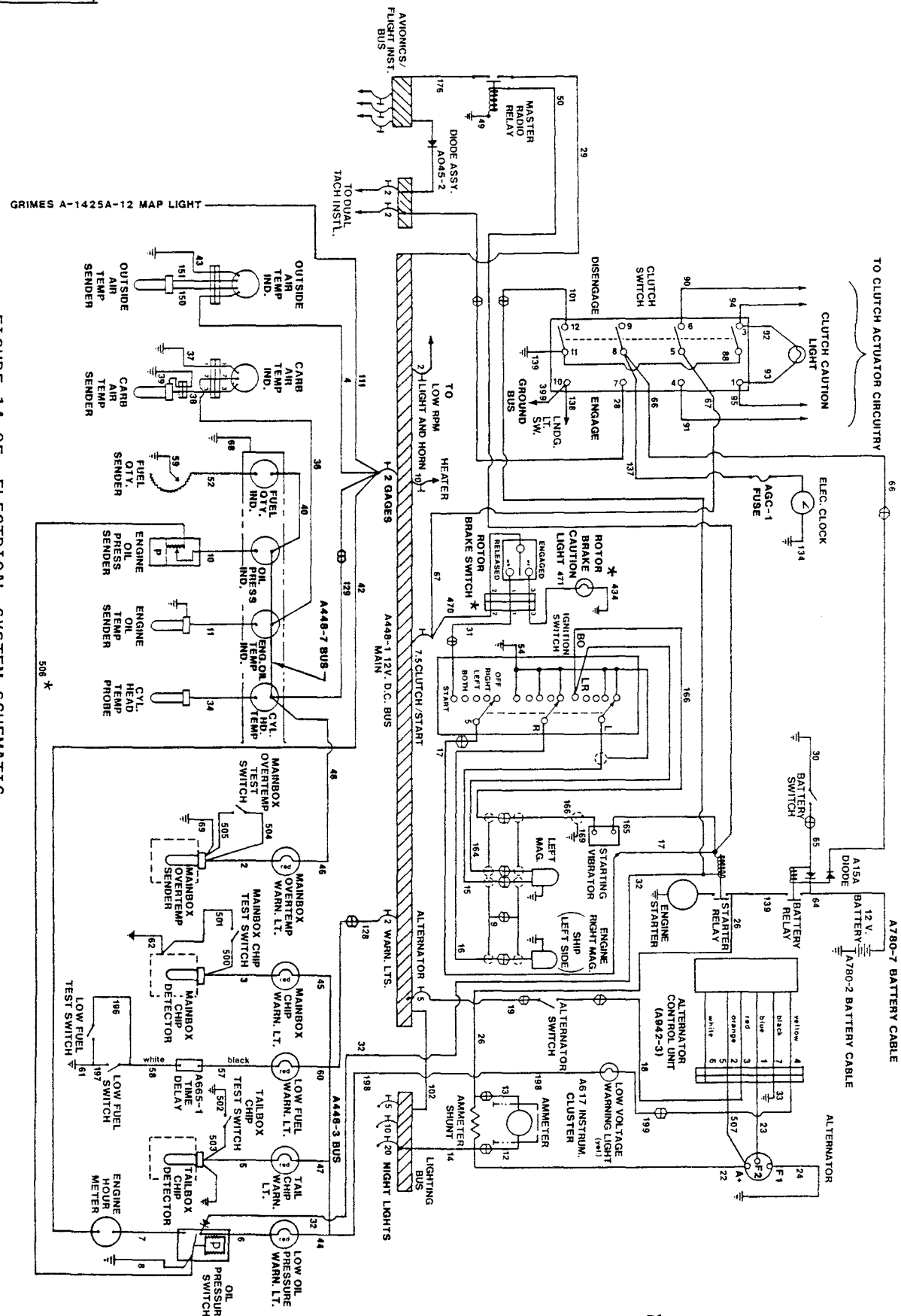

FIGURE 14-2F ELECTRICAL SYSTEM SCHEMATIC
(IGNITION VIBRATOR) (S/N 444 thru 655, 10/2/84 thru 6/10/87)

*If installed.

14.600 (cont'd)

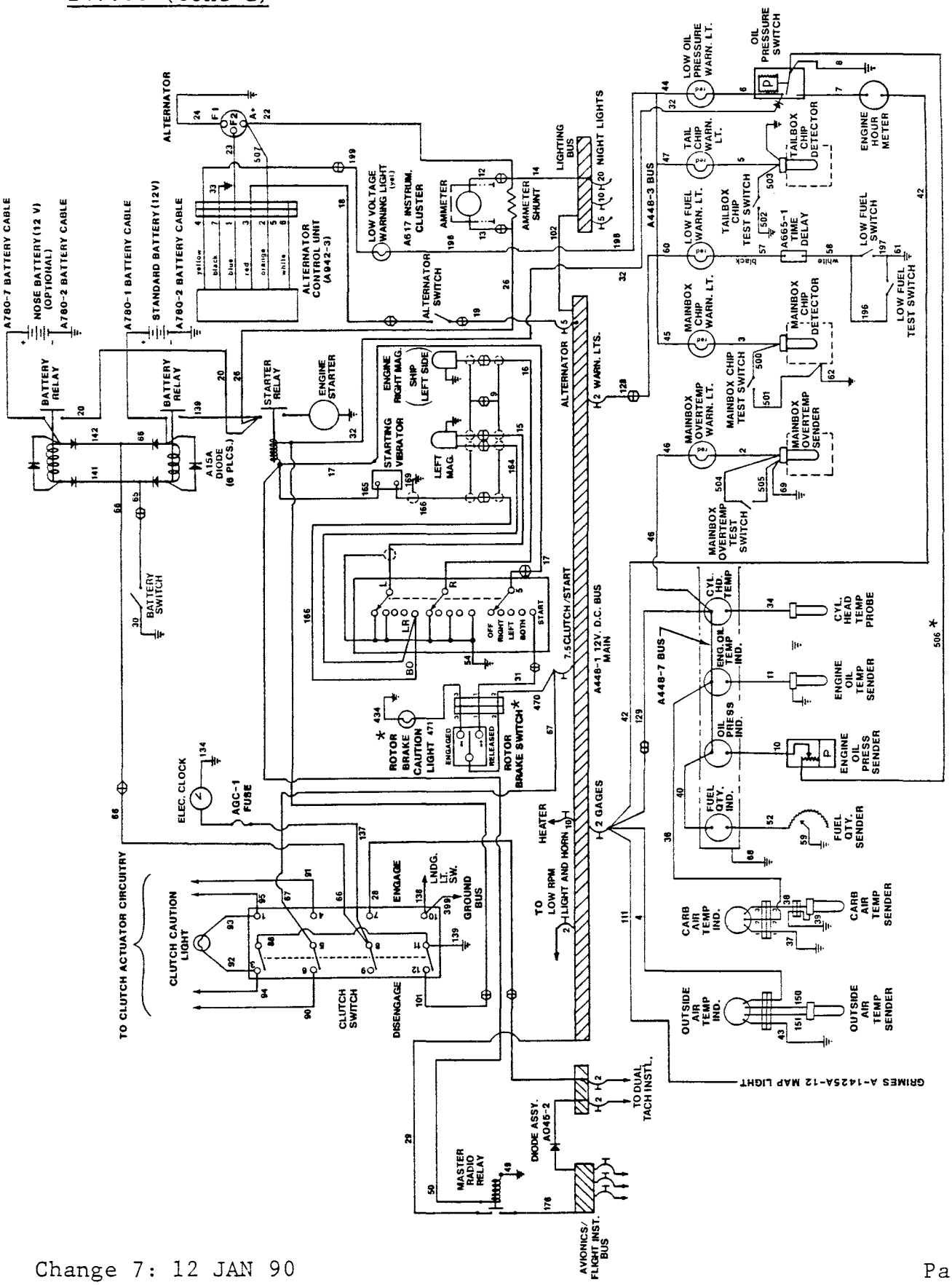

FIGURE 14-2F ELECTRICAL SYSTEM SCHEMATIC - DUAL BATTERY PROVISION (IGNITION VIBRATOR) (S/N 444 thru 655, 10/2/84 thru 6/10/87)

*If installed.

14.600 (cont'd)

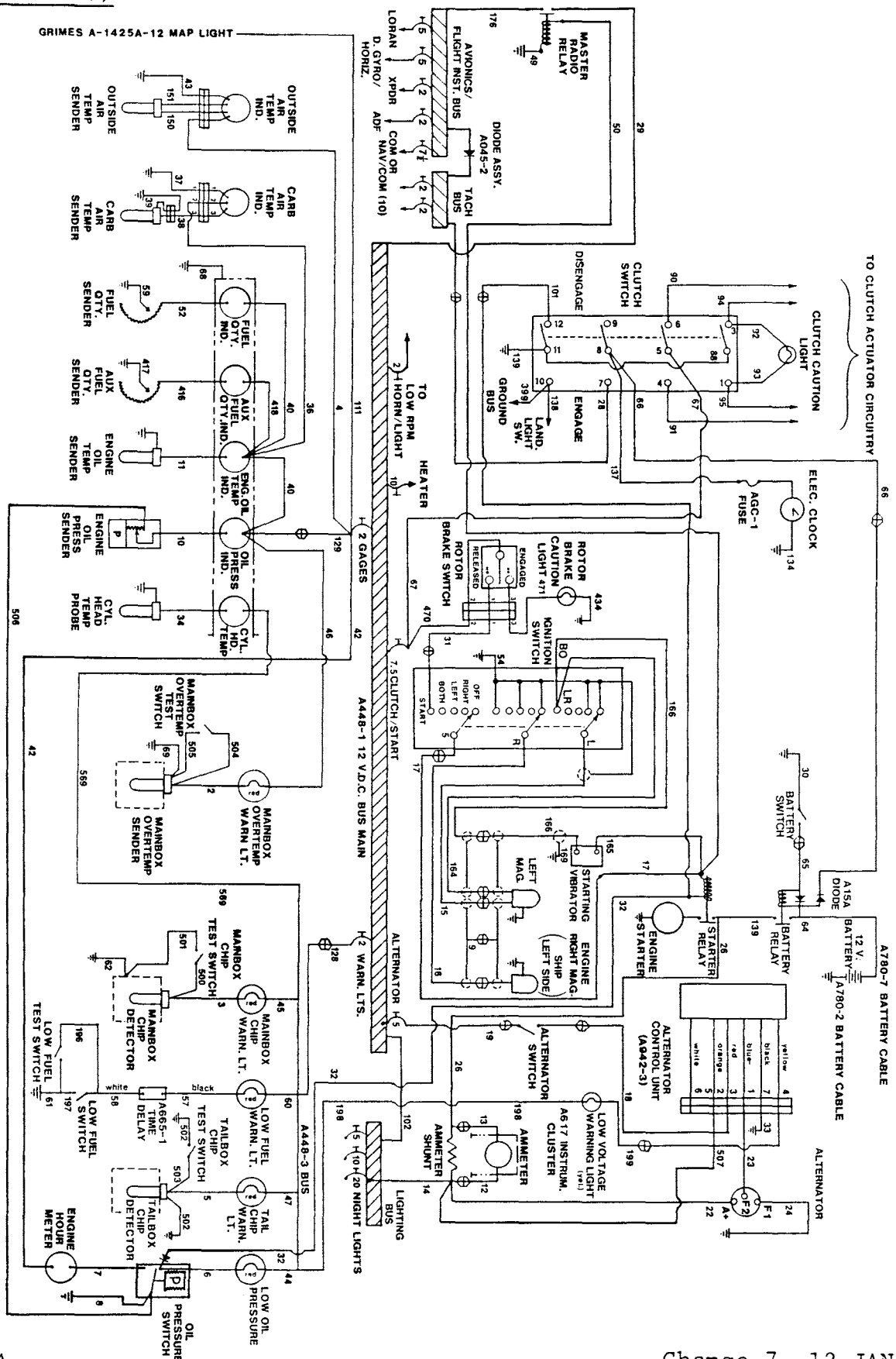

FIGURE 14-2G ELECTRICAL SYSTEM SCHEMATIC
(IGNITION VIBRATOR) (S/N 656 THRU 1084 EXCEPT S/Ns
1052, 1056, 1067, & 1071 AND OVERHAULED SHIPS
6/10/87 AND ON)

14.600 (cont'd)

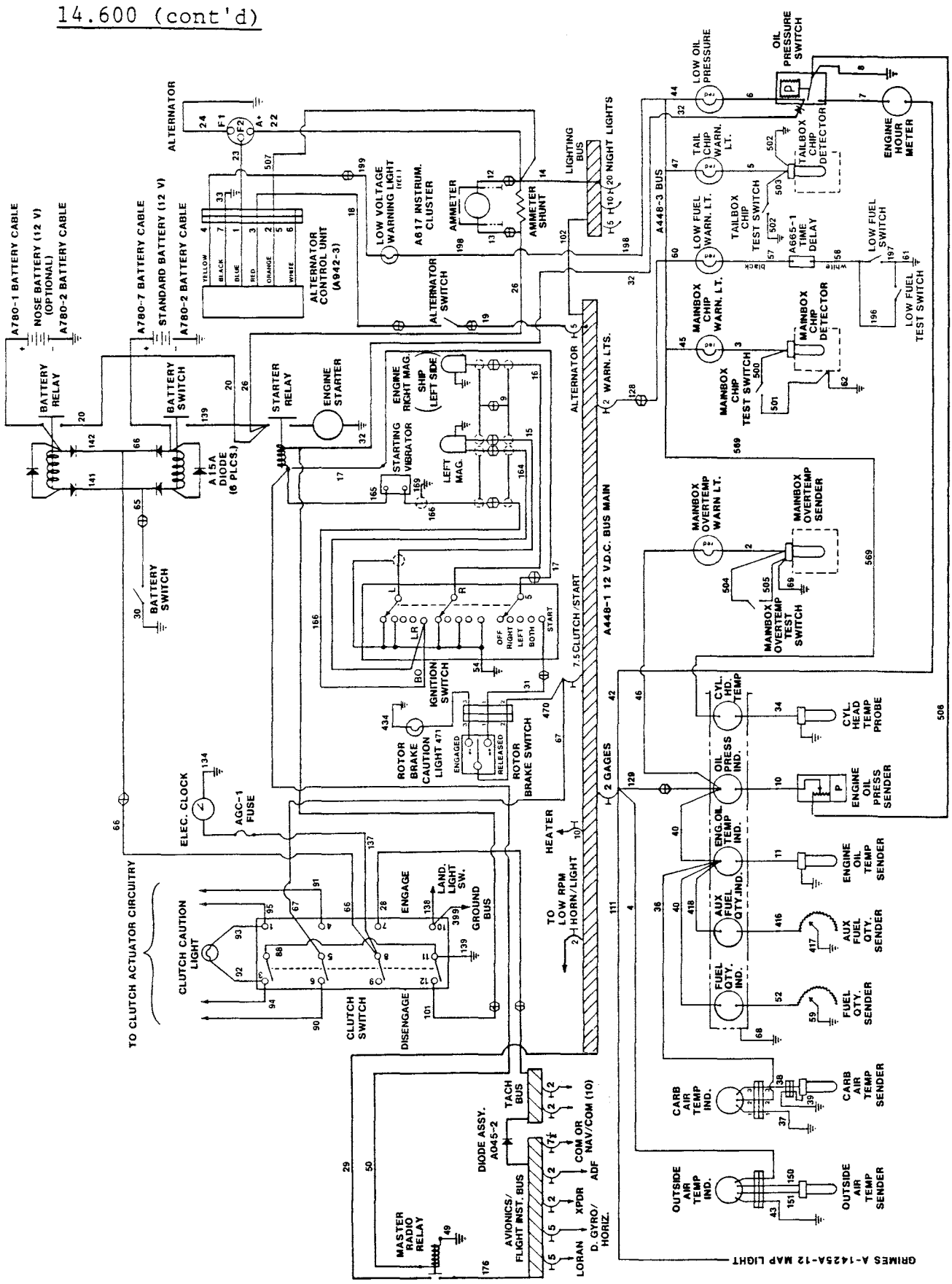

FIGURE 14-2H ELECTRICAL SYSTEM SCHEMATIC - DUAL BATTERY PROVISION (IGNITION VIBRATOR) (S/N 656 THRU 1084 EXCEPT S/Ns 1052, 1056, 1067, & 1071 AND OVERHAULED SHIPS 6/10/87 AND ON)

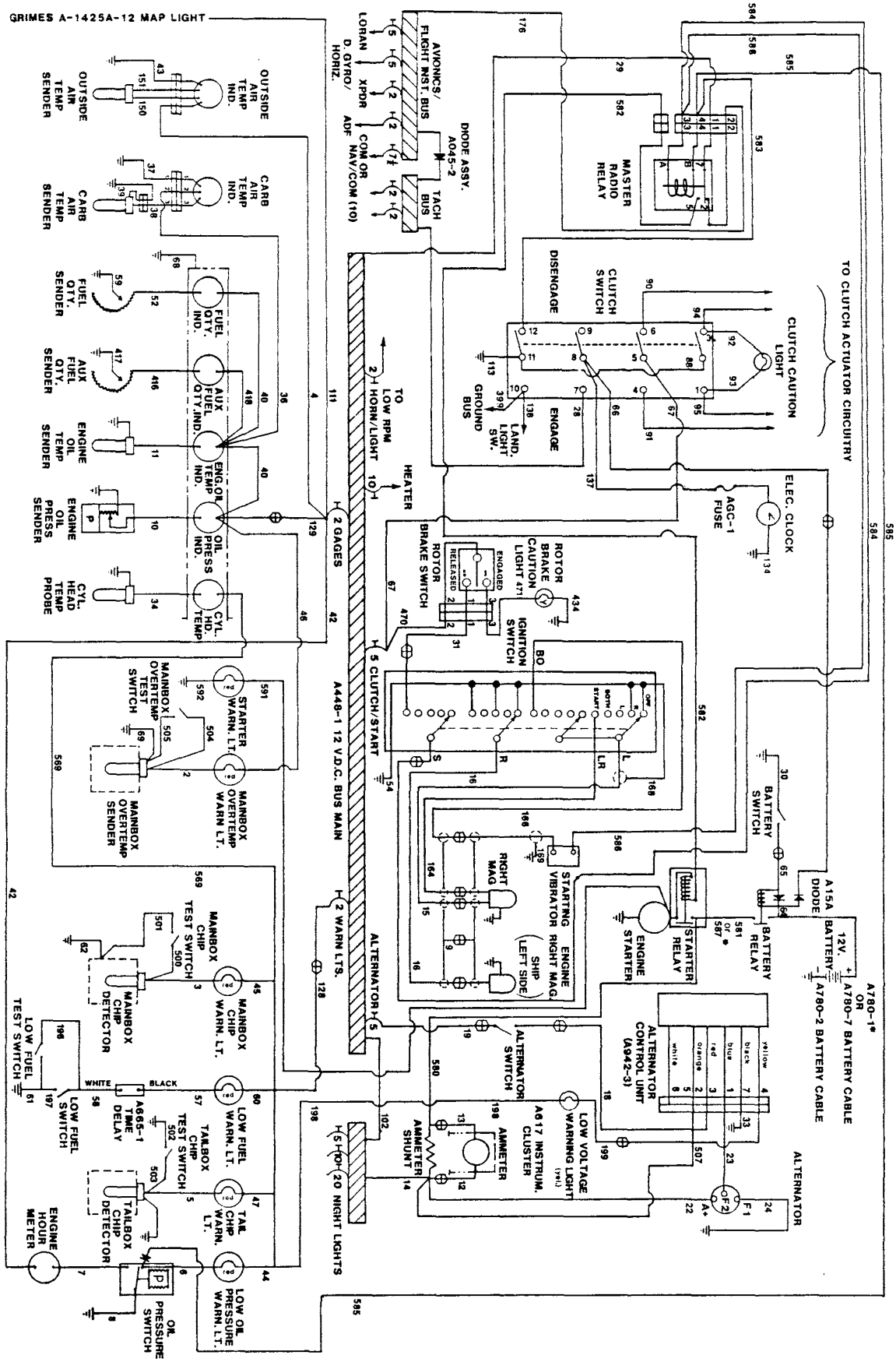

FIGURE 14-21 ELECTRICAL SYSTEM SCHEMATIC (IGNITION VIBRATOR) (S/N 1052, 1056, 1067, 1071, & 1085 AND ON.

*A780-1 and #587 wire used with nose battery installation.

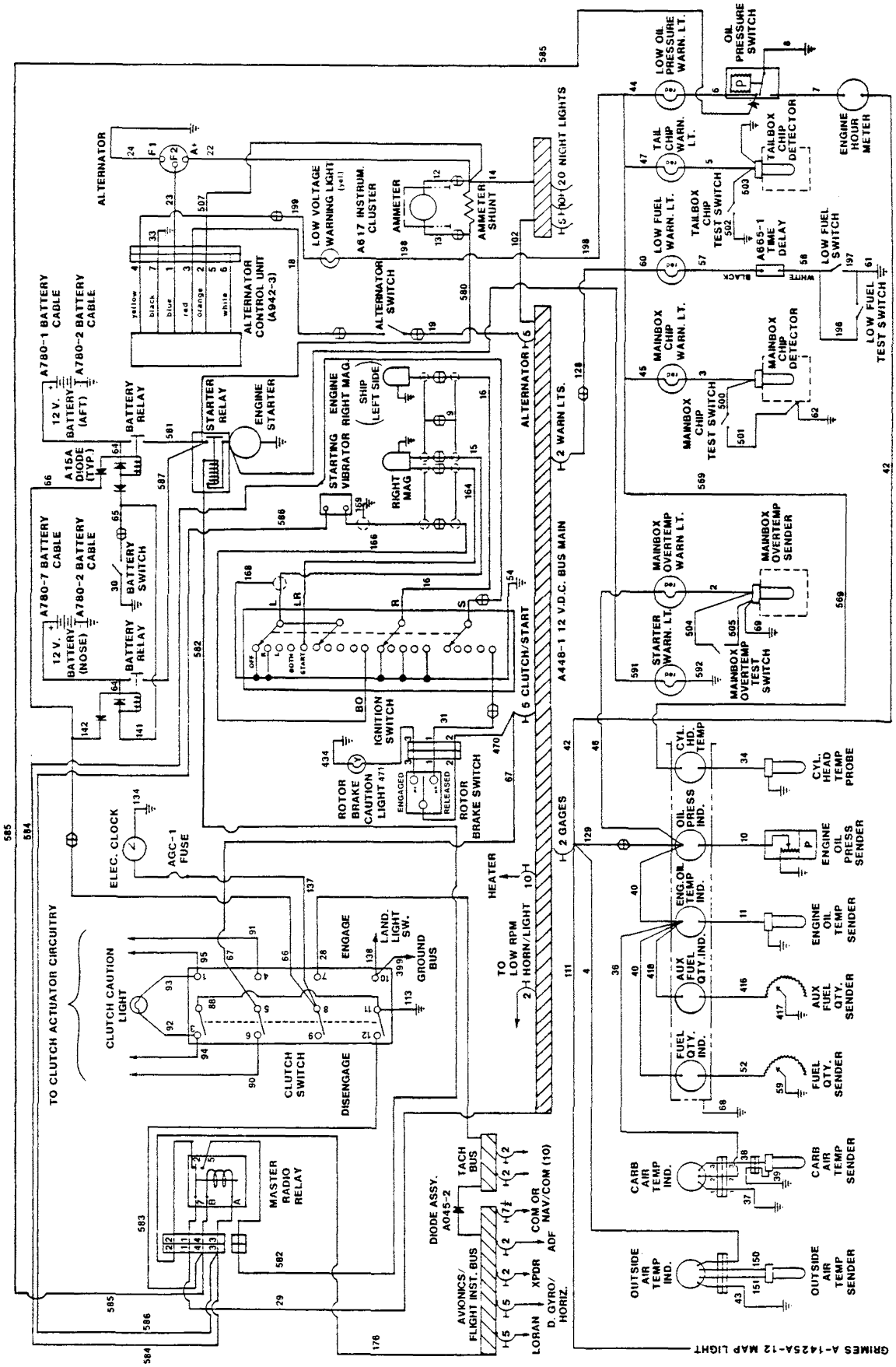

FIGURE 14-J ELECTRICAL SYSTEM SCHEMATIC - DUAL BATTERY PROVISION (IGNITION VIBRATOR) (S/N 1085 & ON)

14.600 (cont'd)

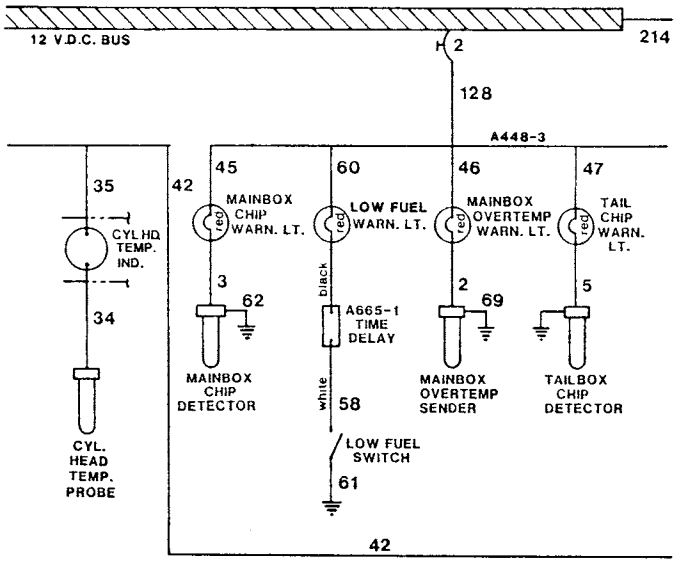

FIGURE 14-2K

M.R. GEARBOX OVERTEMP LIGHT ON 2 AMP WARNING LIGHT BREAKER

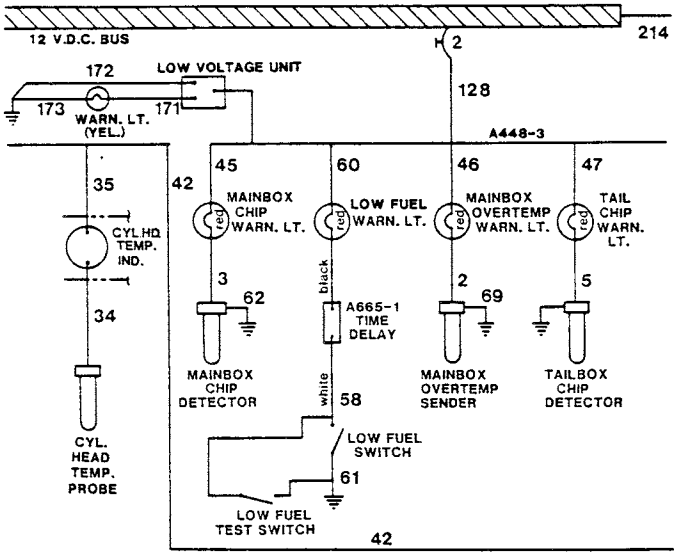

FIGURE 14-2L

M.R. GEARBOX OVERTEMP LIGHT ON 2 AMP WARNING LIGHT BREAKER

LOW VOLTAGE UNIT ON THE 2 AMP WARNING LIGHT BREAKER

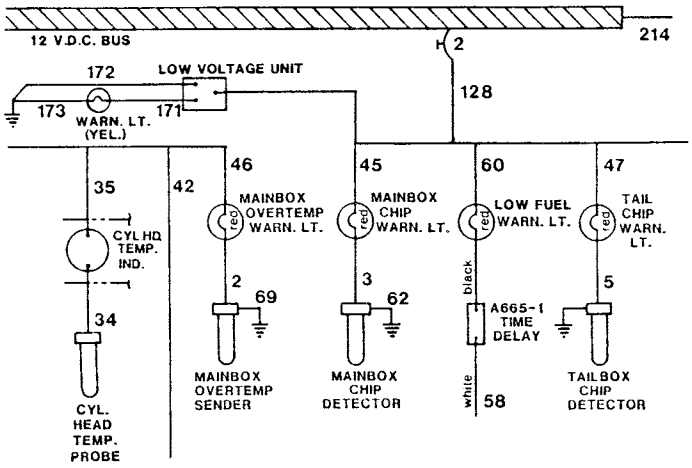

FIGURE 14-2M

M.R. GEARBOX OVERTEMP LIGHT ON 2 AMP GAGES BREAKER

LOW VOLTAGE UNIT ON THE 2 AMP WARNING LIGHT BREAKER

14.600 ELECTRICAL SYSTEM SCHEMATICS (Cont'd)

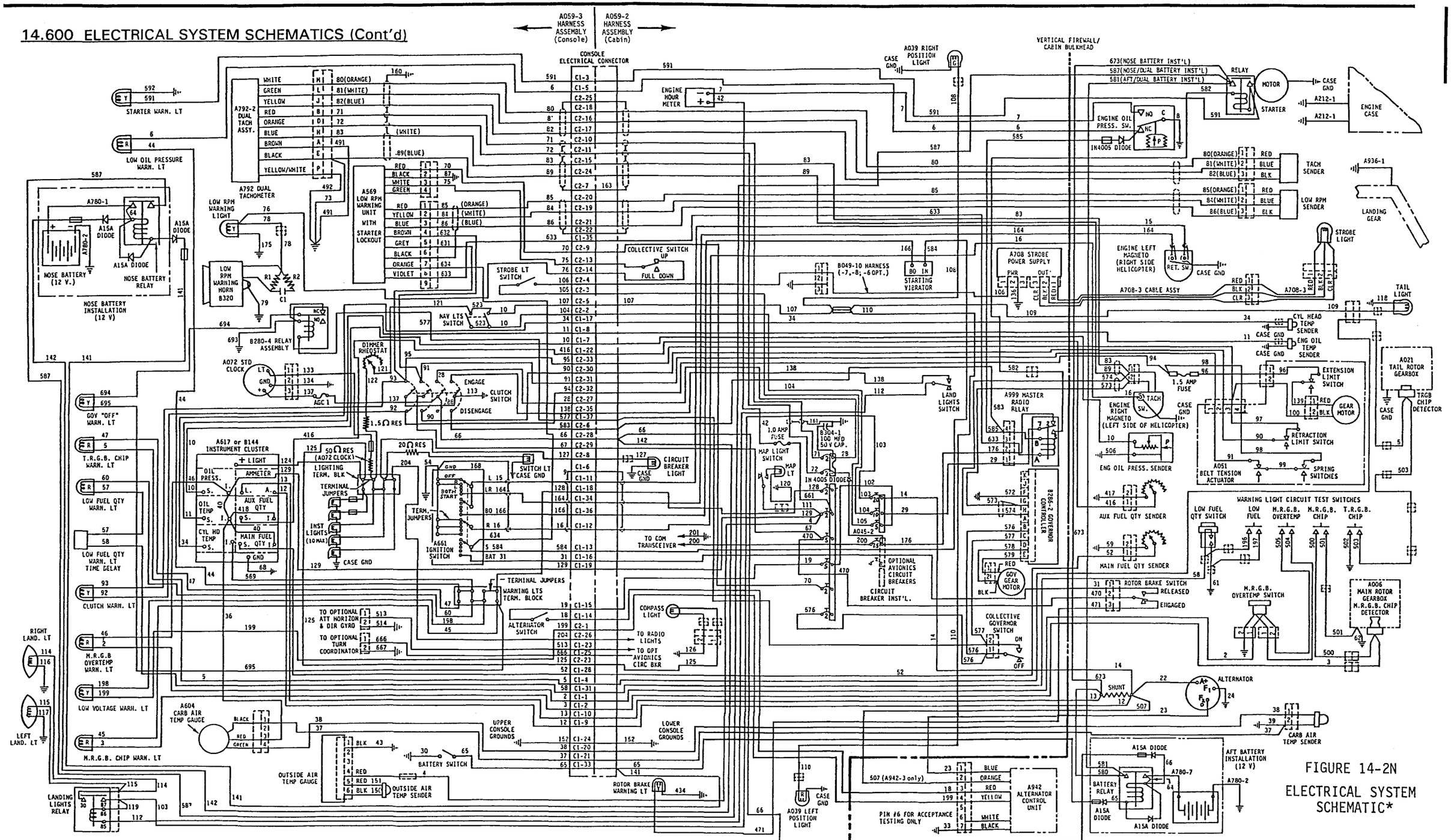

FIGURE 14-2N
ELECTRICAL SYSTEM SCHEMATIC*

*Ship S/N 2115 thru 2588; ships retrofitted with A569-5 low-rotor RPM warning unit having starter lock-out feature enabled (unit's 9-pin connector connected to airframe wiring). See Figure 14-2P if fuseblock is installed on aft side of left vertical firewall.

14.600 ELECTRICAL SYSTEM SCHEMATICS (cont'd)

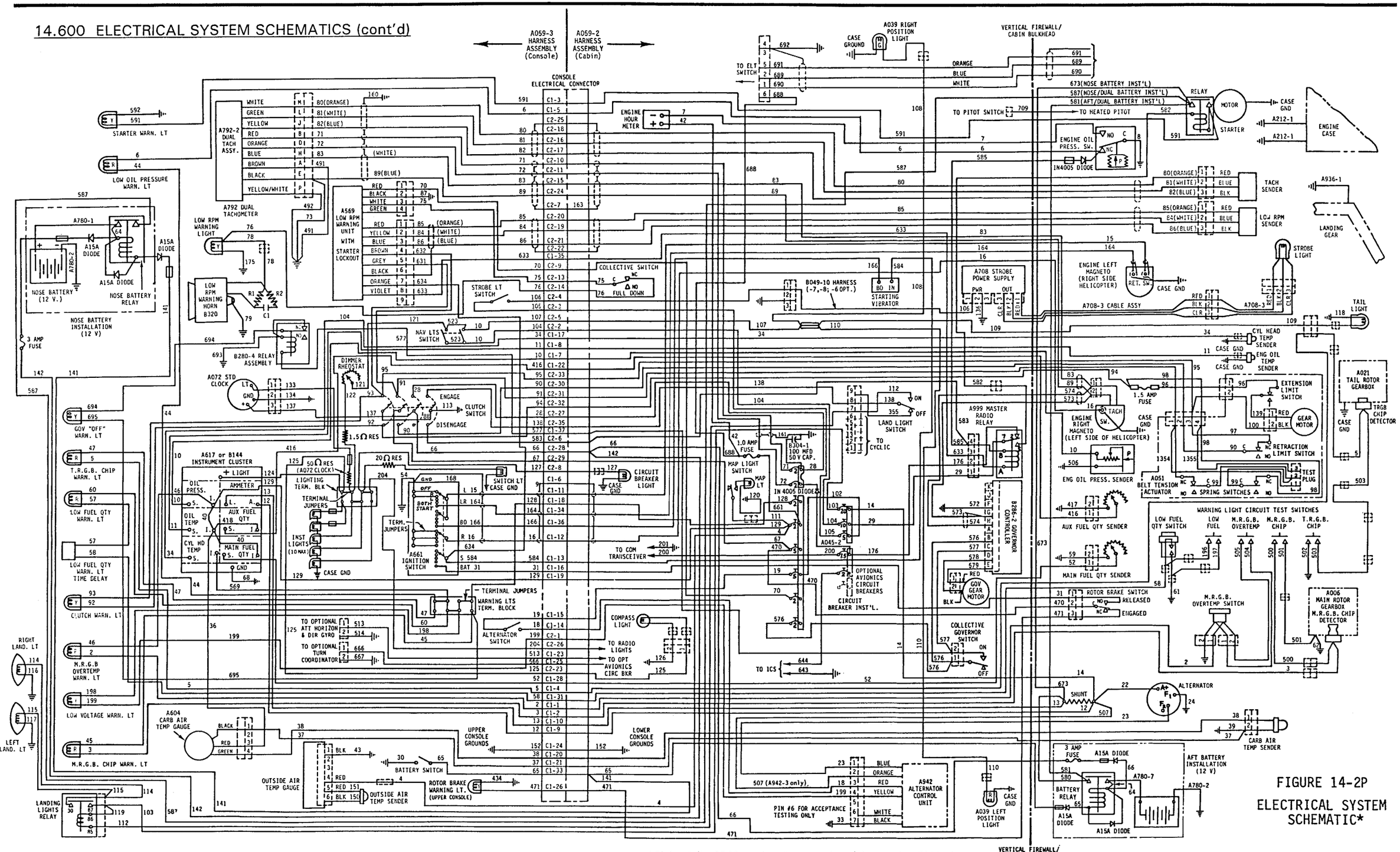

FIGURE 14-2P

ELECTRICAL SYSTEM SCHEMATIC*

*Ship S/N 2589 and subsequent; ships retrofitted with fuseblock installed on aft side of left vertical firewall.

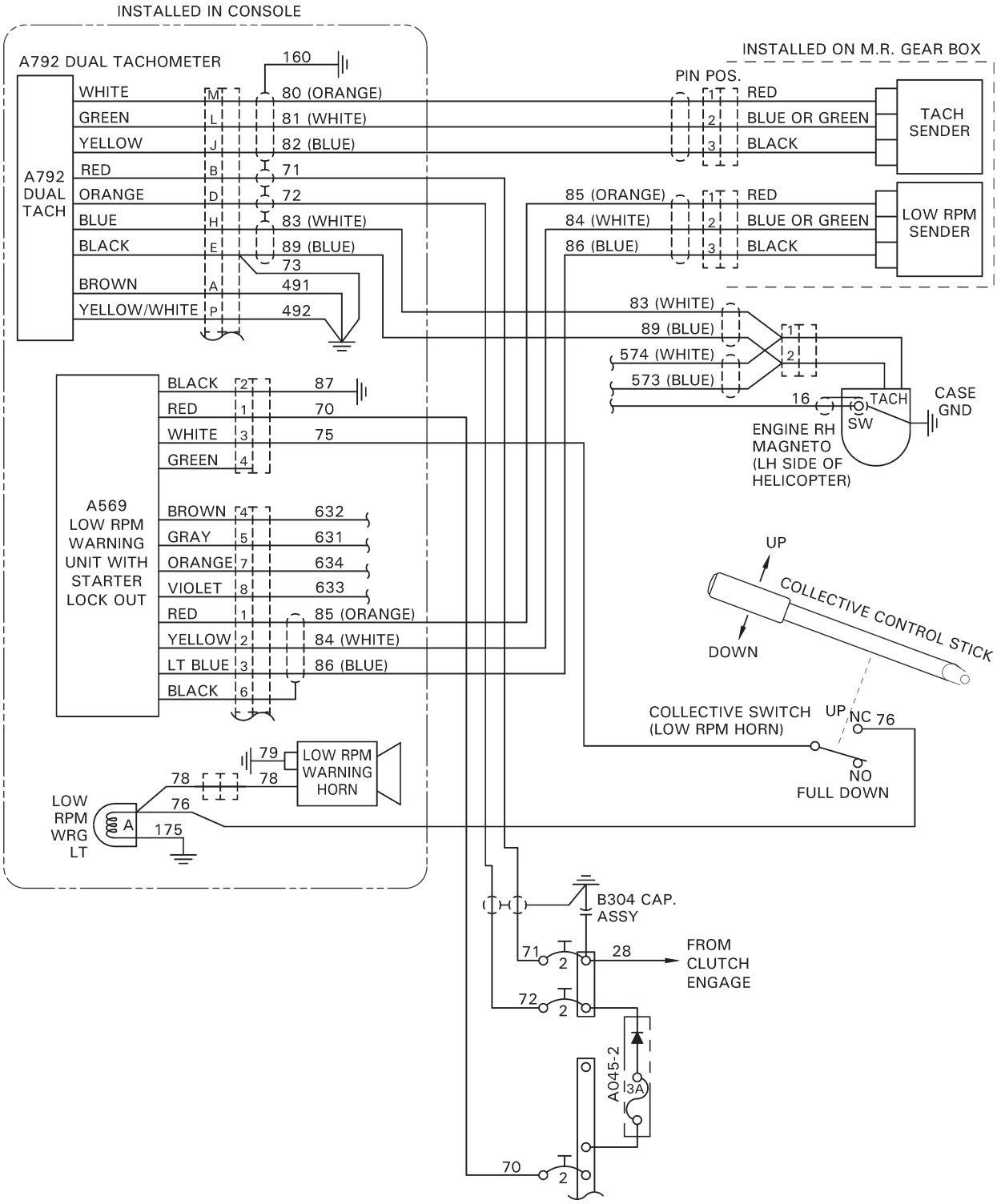

FIGURE 14-3 TACHOMETER & LOW RPM WARNING HORN SCHEMATIC

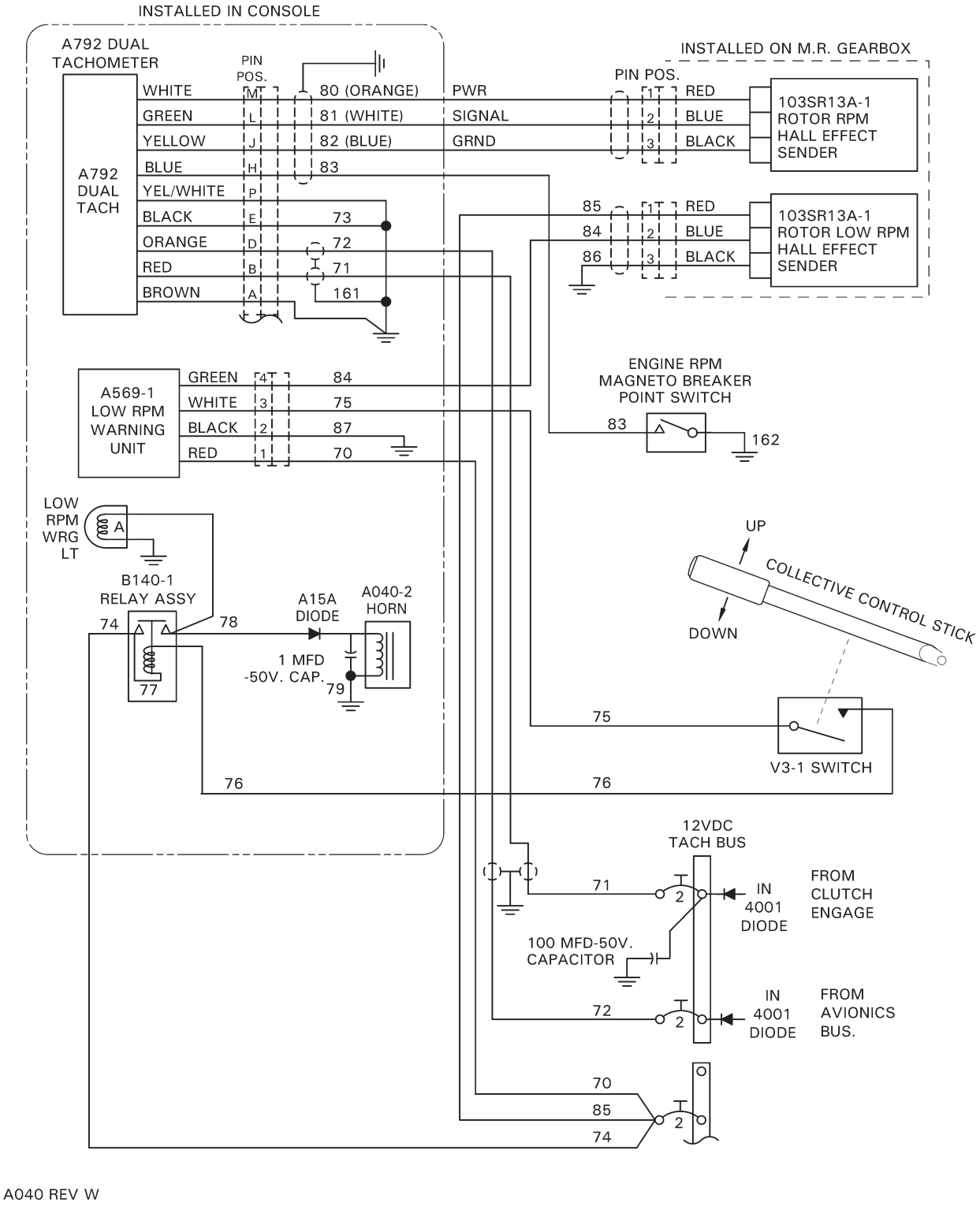

FIGURE 14-3A TACHOMETER & LOW RPM WARNING HORN SCHEMATIC (EARLIER SHIPS)

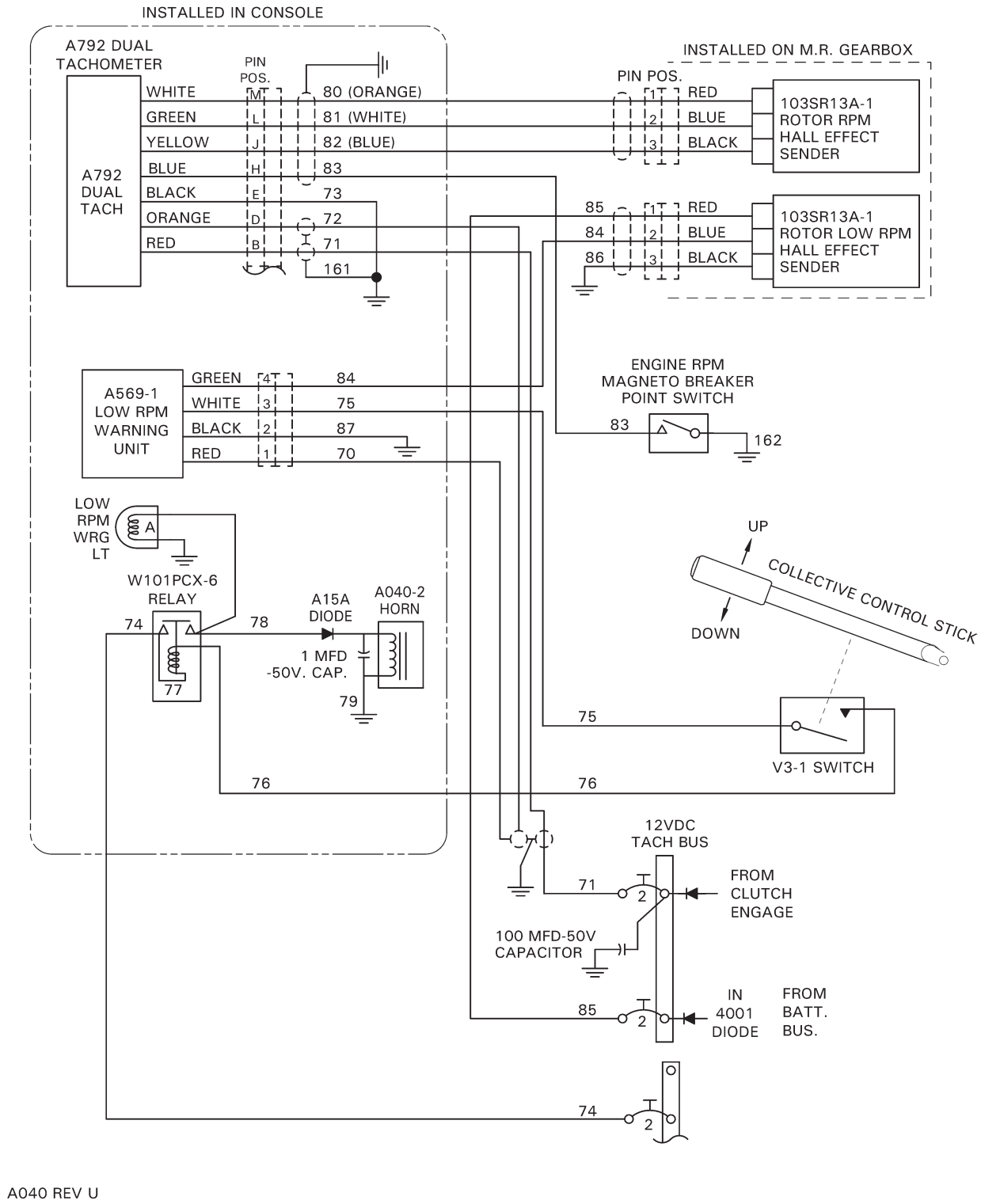

FIGURE 14-3B TACHOMETER & LOW RPM WARNING HORN SCHEMATIC (S/N 0002 THRU 0223)

Intentionally Blank

14.600 ELECTRICAL SYSTEM SCHEMATICS (Cont'd)

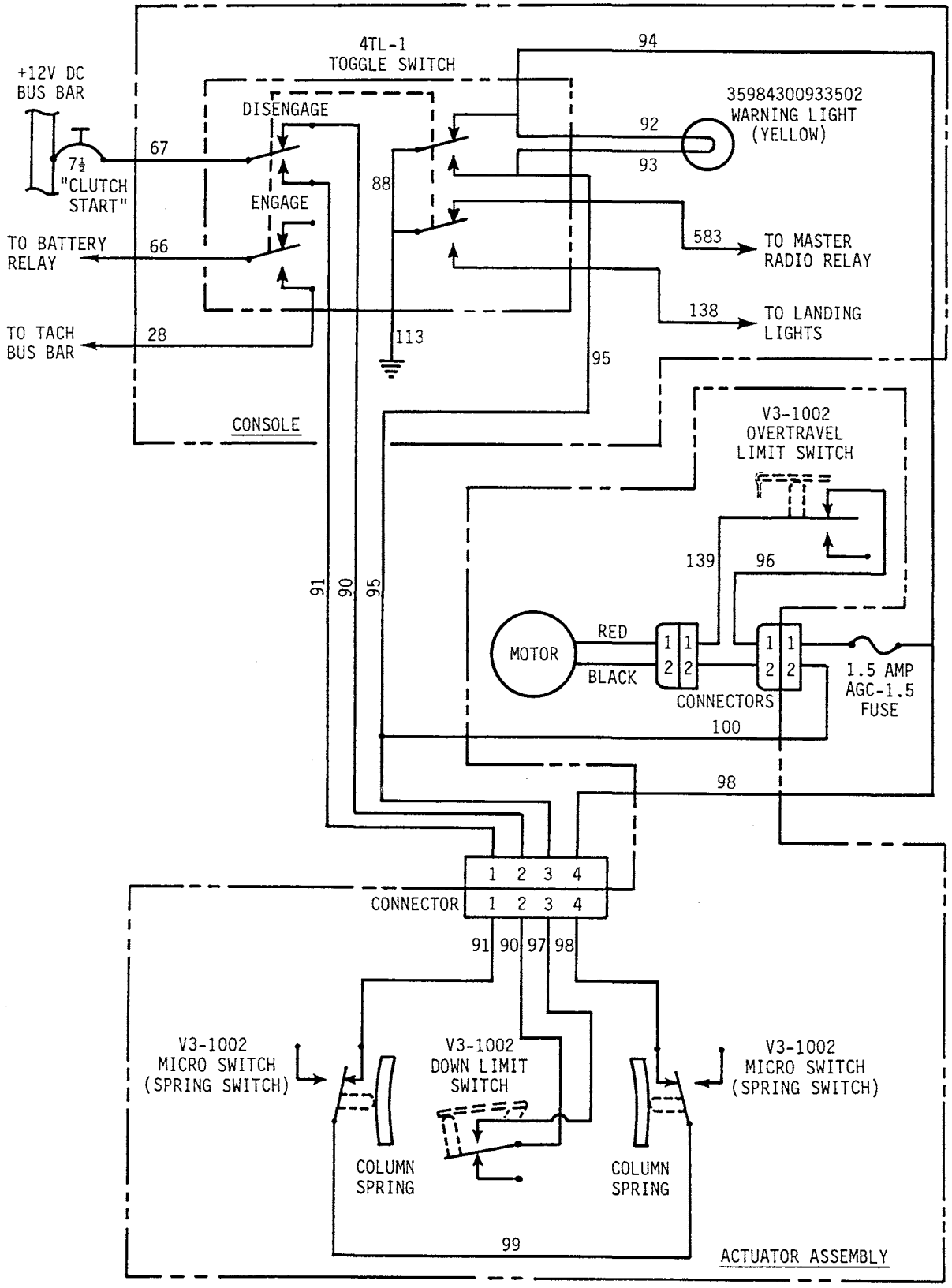

FIGURE 14-4 BELT TENSION ACTUATOR SCHEMATIC (WITHOUT TEST PLUG; SHOWN FULLY DISENGAGED)

14.600 ELECTRICAL SYSTEM SCHEMATICS (Cont'd)

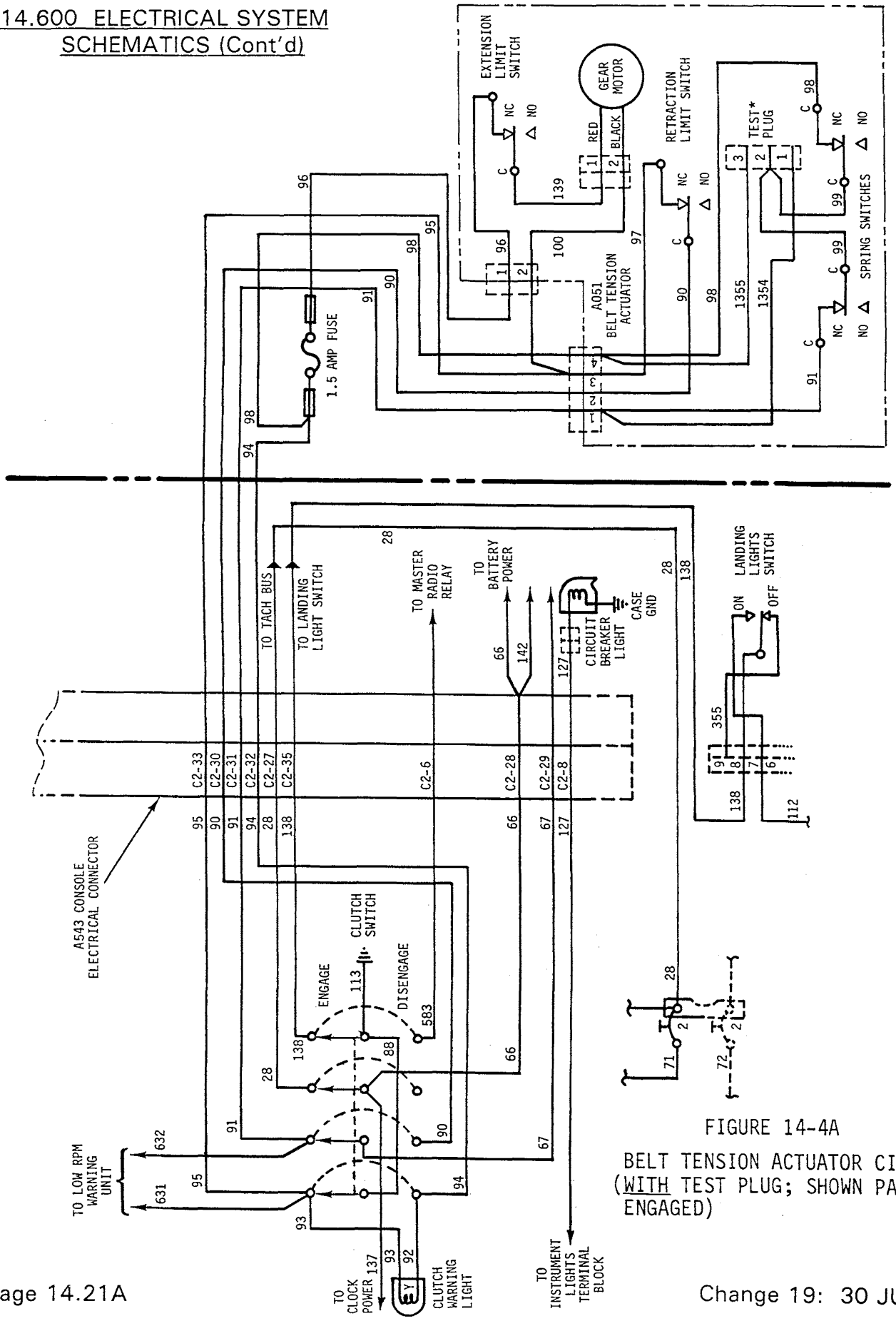

FIGURE 14-4A

BELT TENSION ACTUATOR CIRCUIT (WITH TEST PLUG; SHOWN PARTIALLY ENGAGED)

Intentionally blank.

14.600 (cont'd)

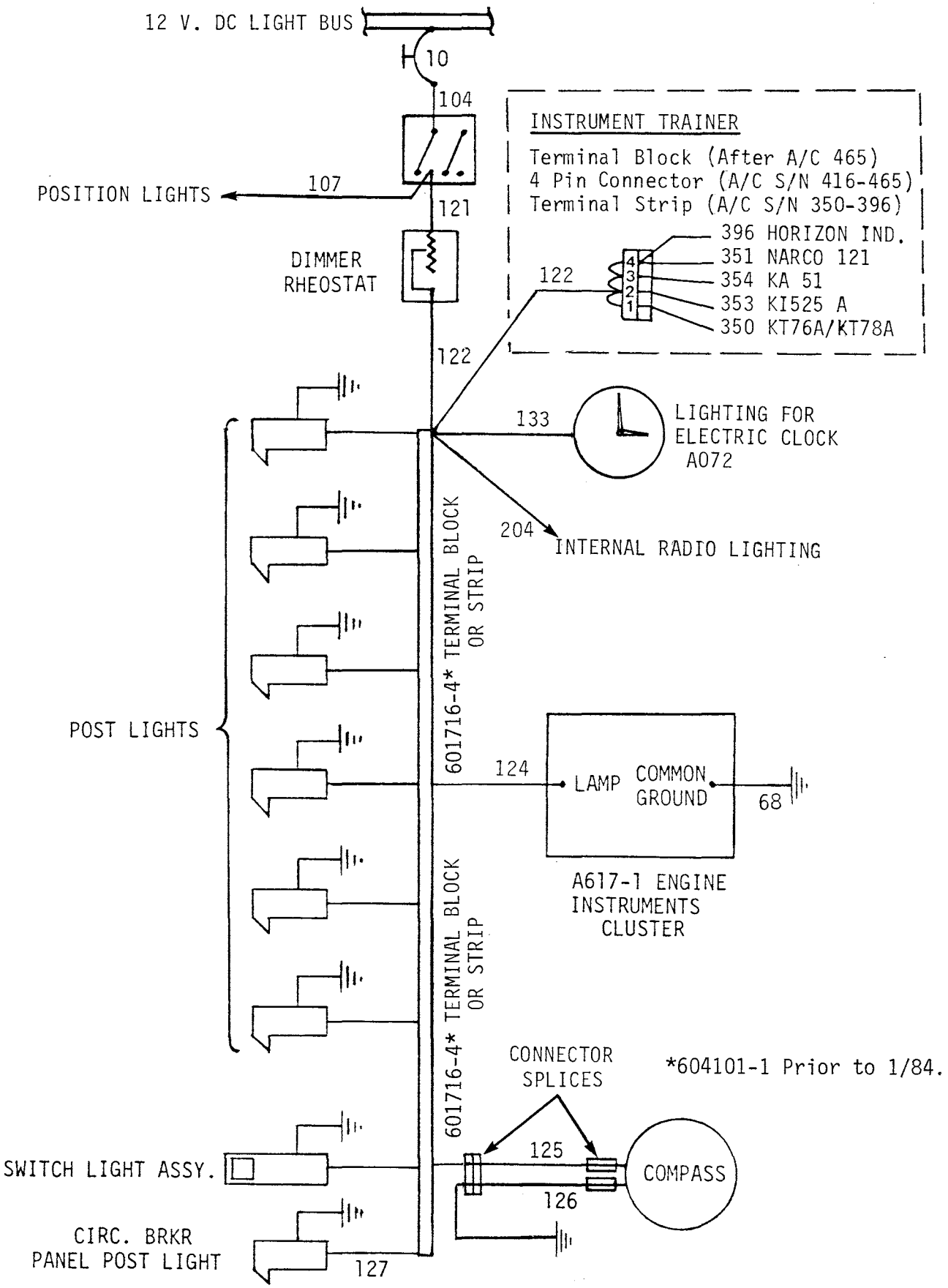

FIGURE 14-5 INSTRUMENT LIGHTING SCHEMATIC

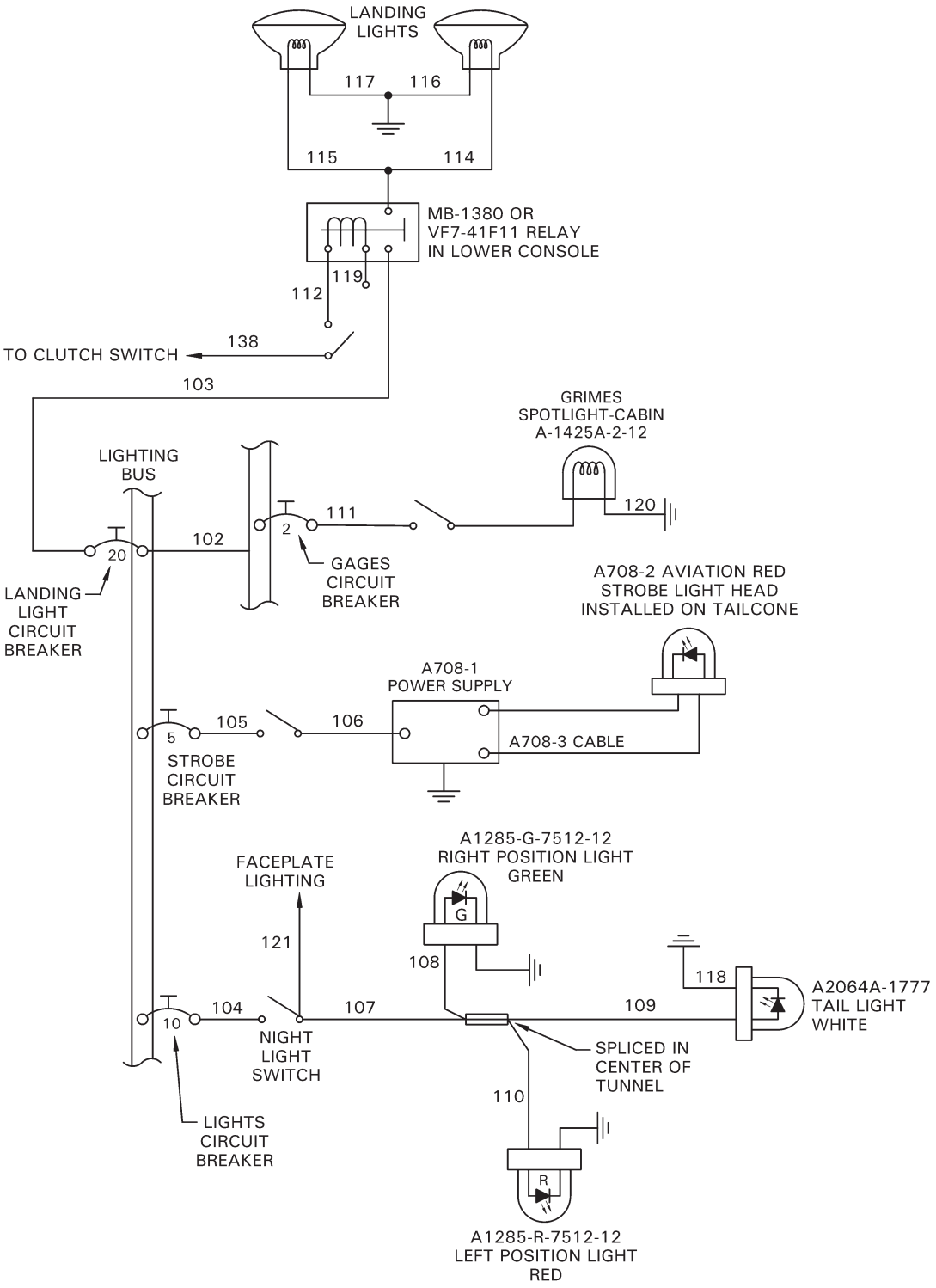

A024 REV BD

FIGURE 14-5A NIGHT LIGHTING SCHEMATIC

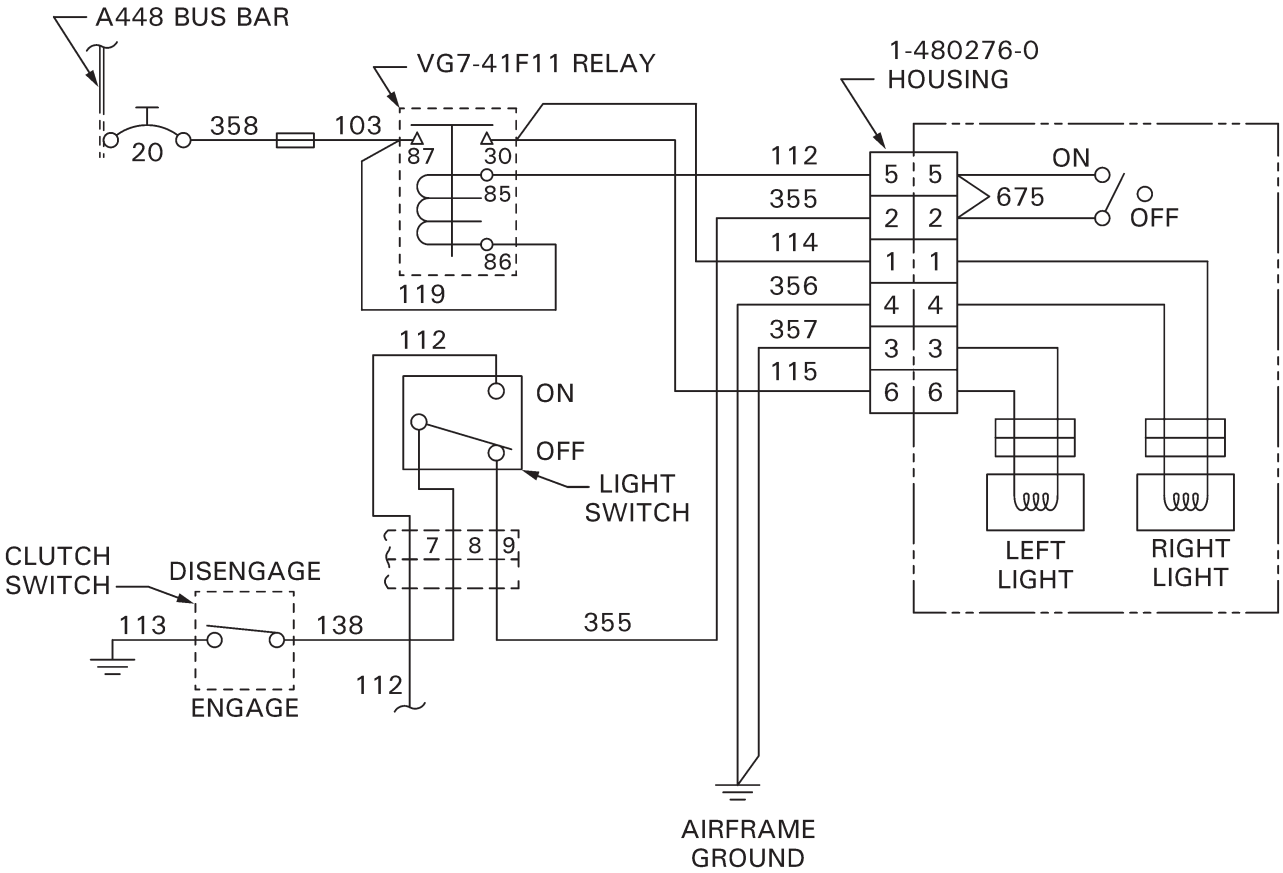

A081 REV M

FIGURE 14-6 WIRING SCHEMATIC FOR SEARCHLIGHT

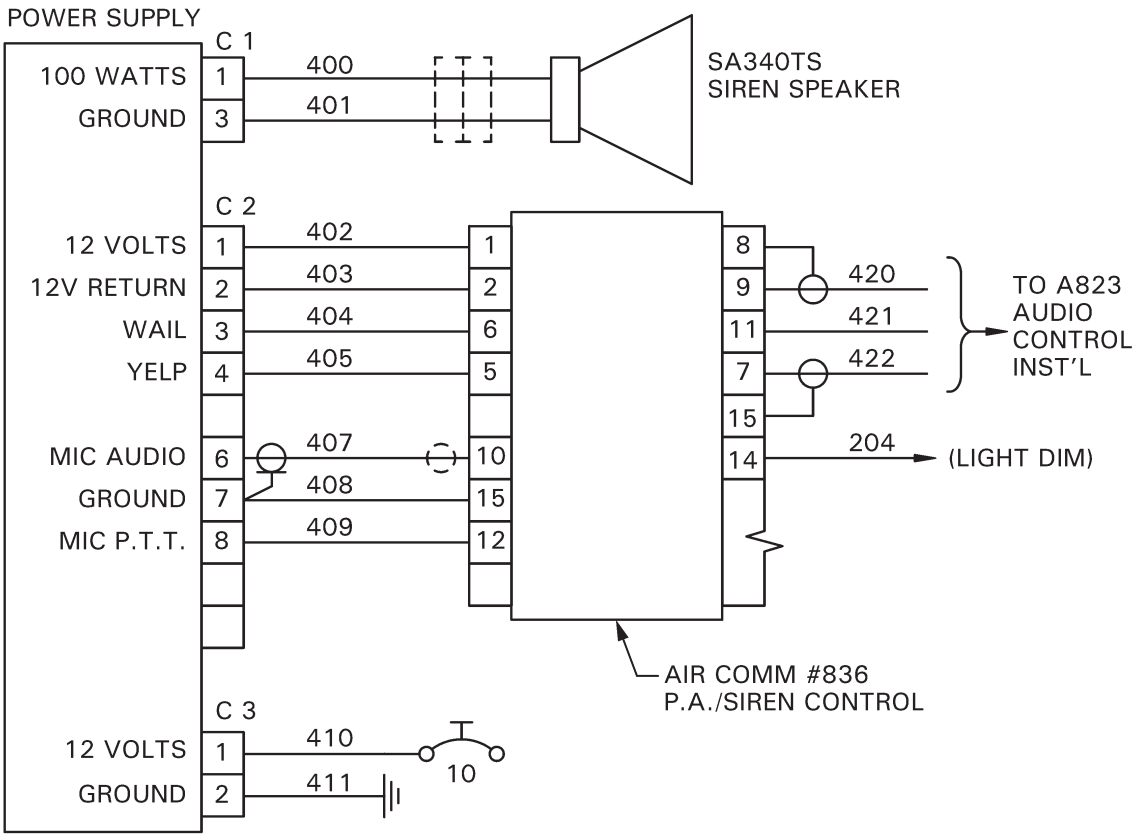

A079 REV J

FIGURE 14-6A PA SIREN WIRING SCHEMATIC

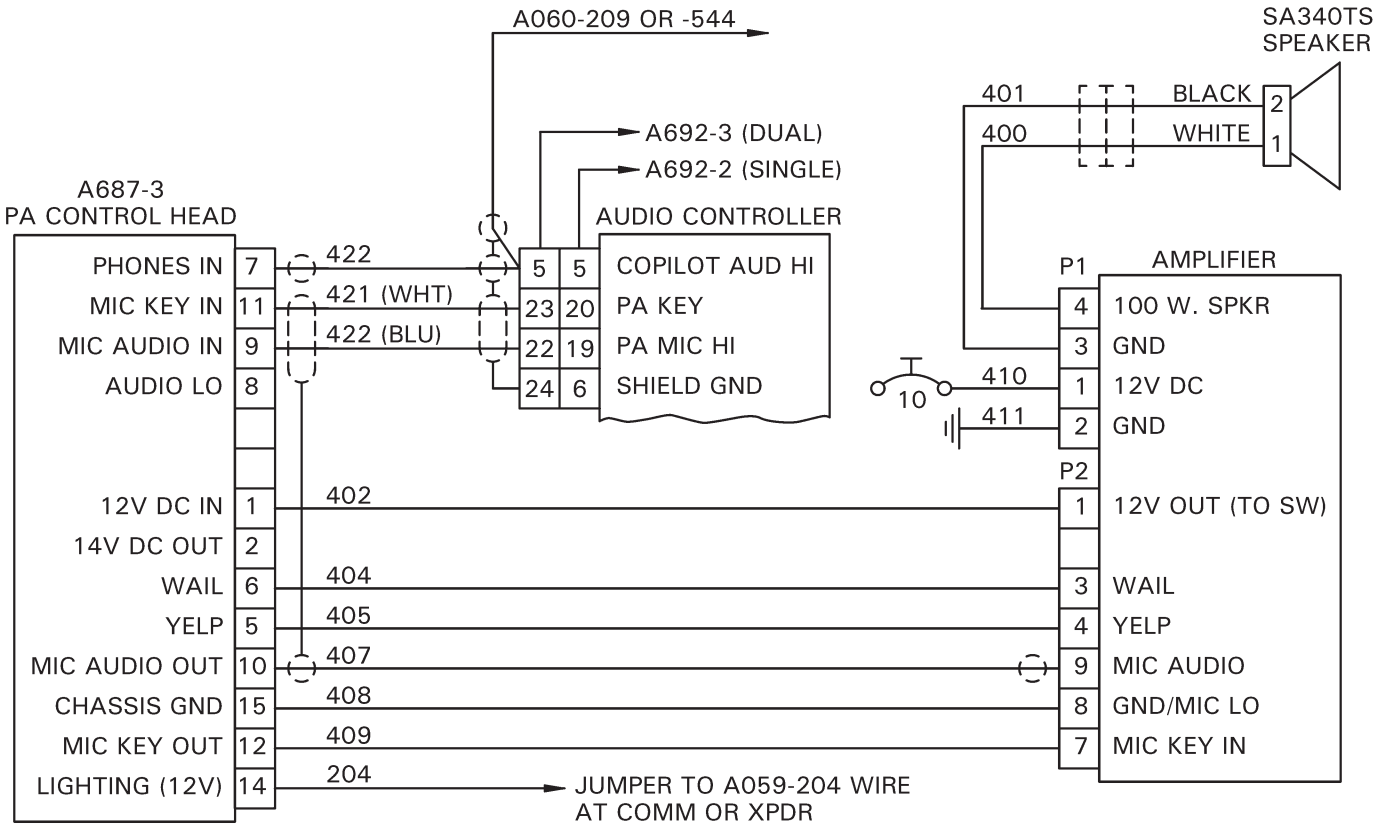

A079 REV L

FIGURE 14-6B PA SIREN SYSTEM SCHEMATIC (WITH AUDIO CONTROL)

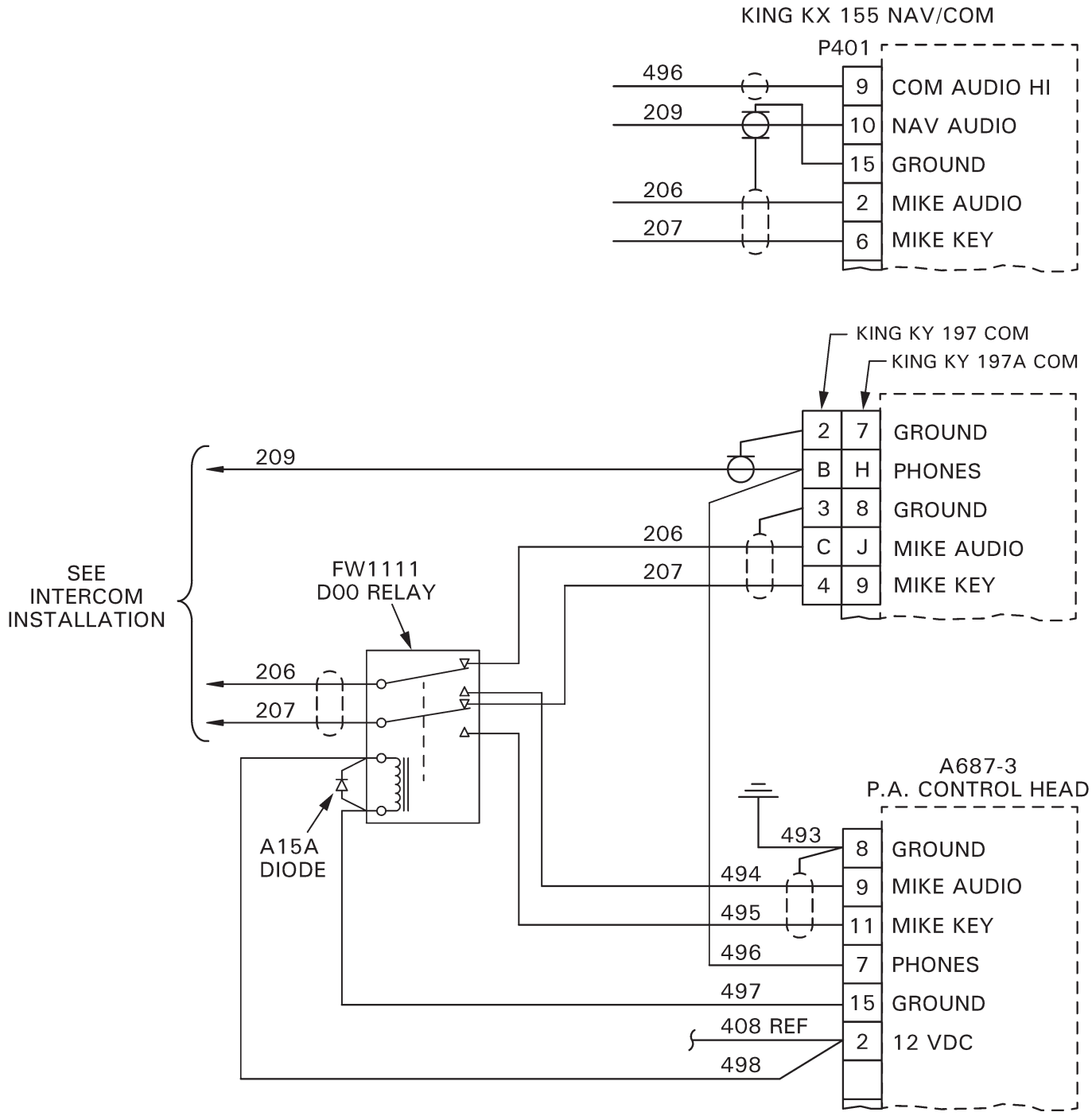

A079 REV K

FIGURE 14-6C PA SIREN SYSTEM SCHEMATIC (WITH KING KX 155 OR KY 197)

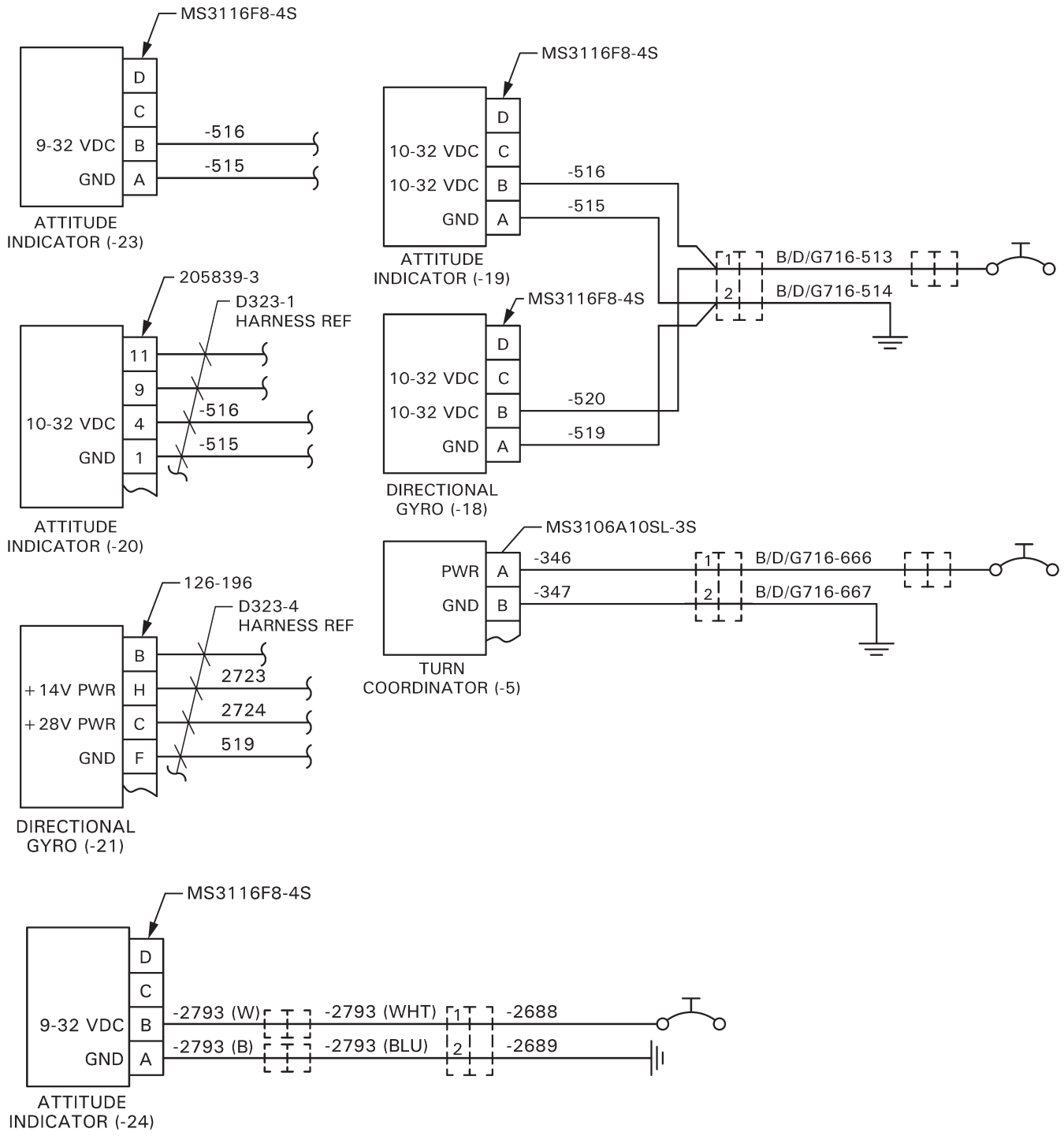

B191 REV AE

FIGURE 14-6D ATTITUDE GYRO AND DIRECTIONAL GYRO INSTALLATION

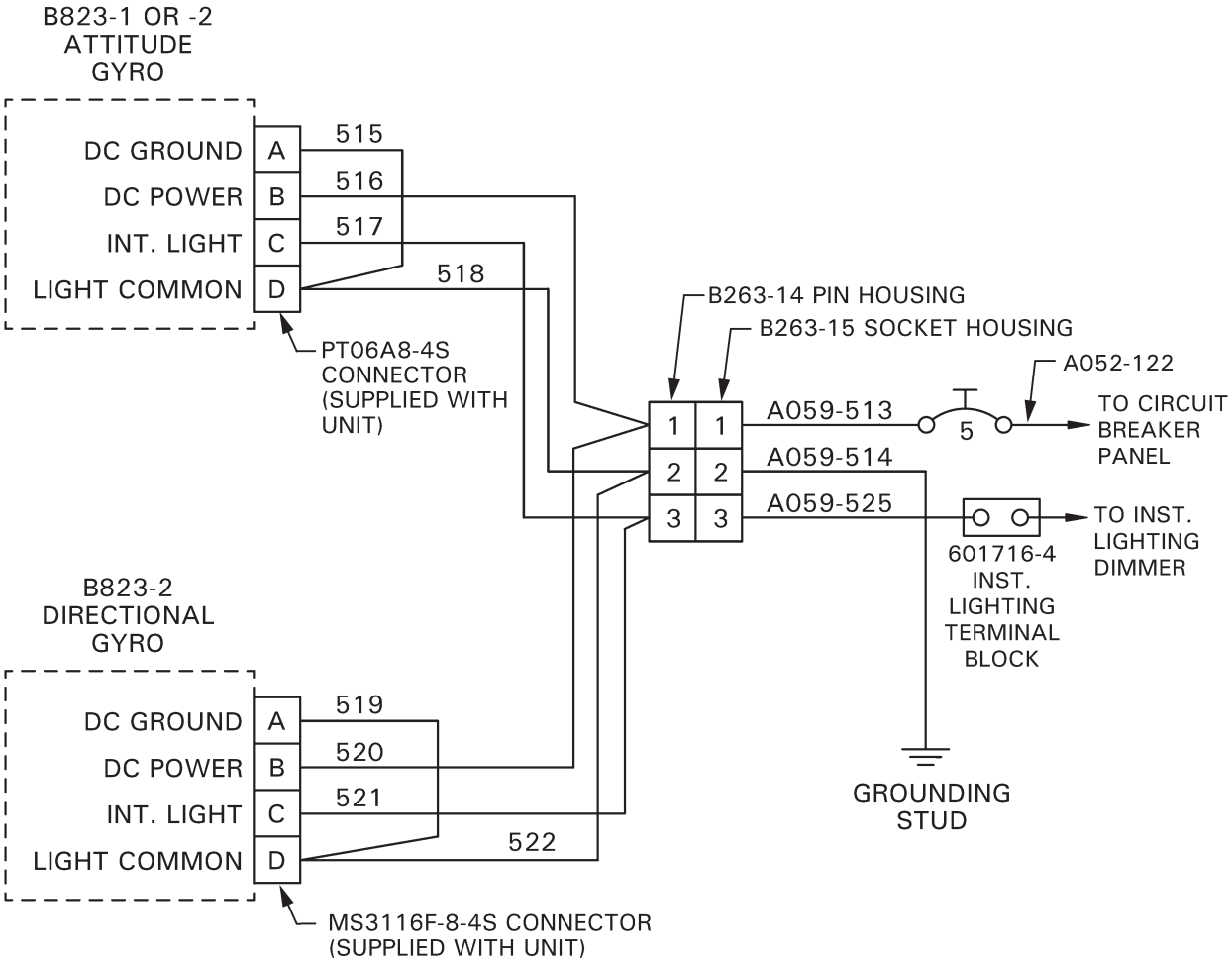

B191 REV E

FIGURE 14-6E ATTITUDE GYRO AND DIRECTIONAL GYRO INSTALLATION (EARLIER SHIPS)

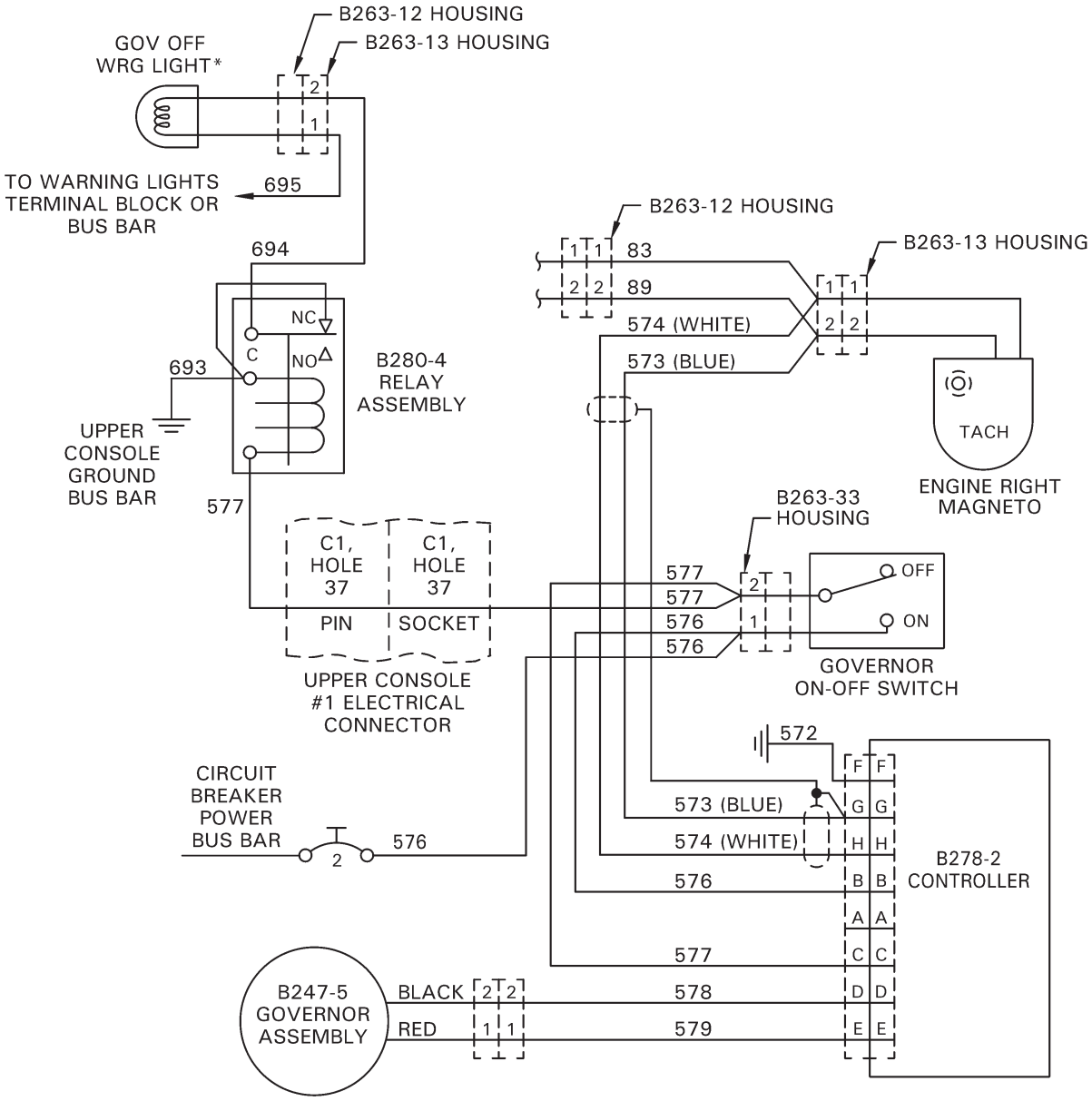

* If not installed, GOVERNOR OFF warning light may be added using KI-100 Kit.

FIGURE 14-6F GOVERNOR SYSTEM SCHEMATIC

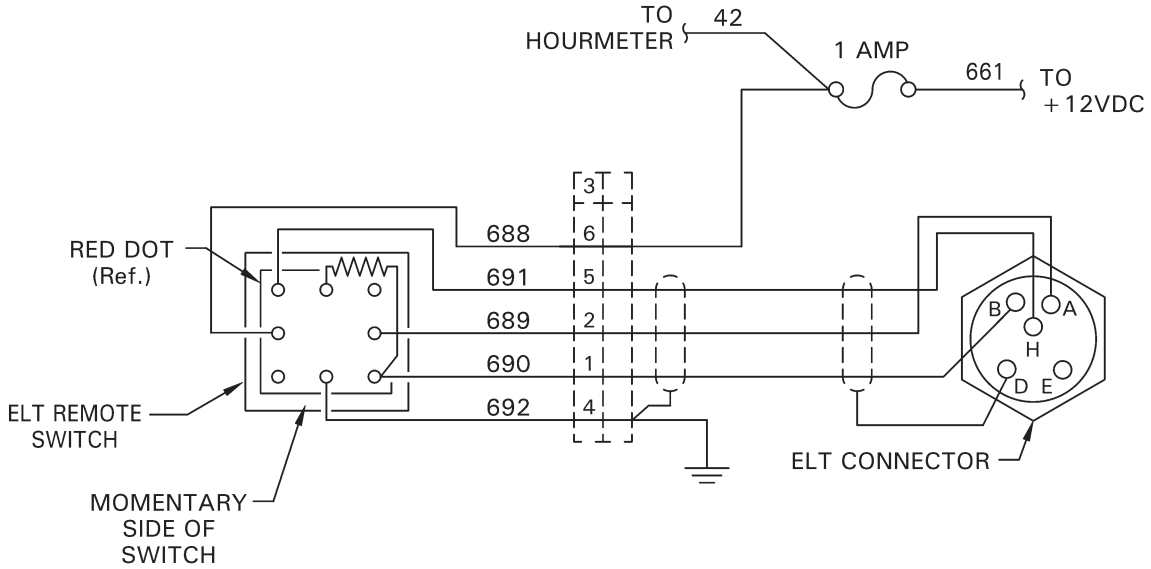

A830 REV D

FIGURE 14-6G ELT REMOTE SWITCH WIRING SCHEMATIC

14.700 Antenna Locations

This section has been moved to § 16-70.

14.800 Avionics Schematics

Basic communications wiring common to all the COM radio configurations include: Pilot and Co-Pilot cyclic stick switches (Transmit and Intercom), and an overhead COM box housing Pilot and Co-Pilot headphone jacks and relays. The intercom system operates through installed COM radio or audio selector panel.

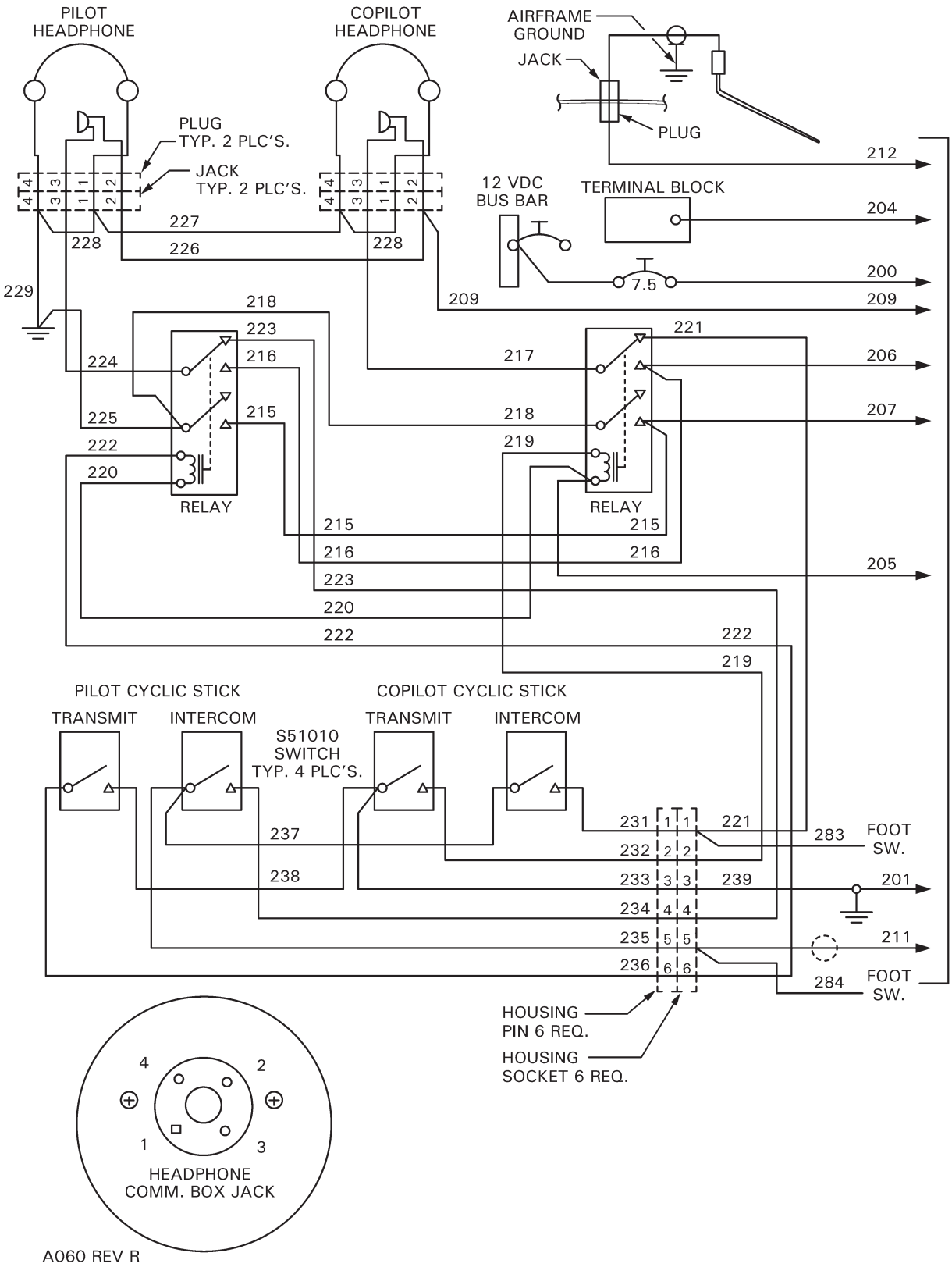

FIGURE 14-8 INTERCOM SYSTEM (EARLIER SHIPS)

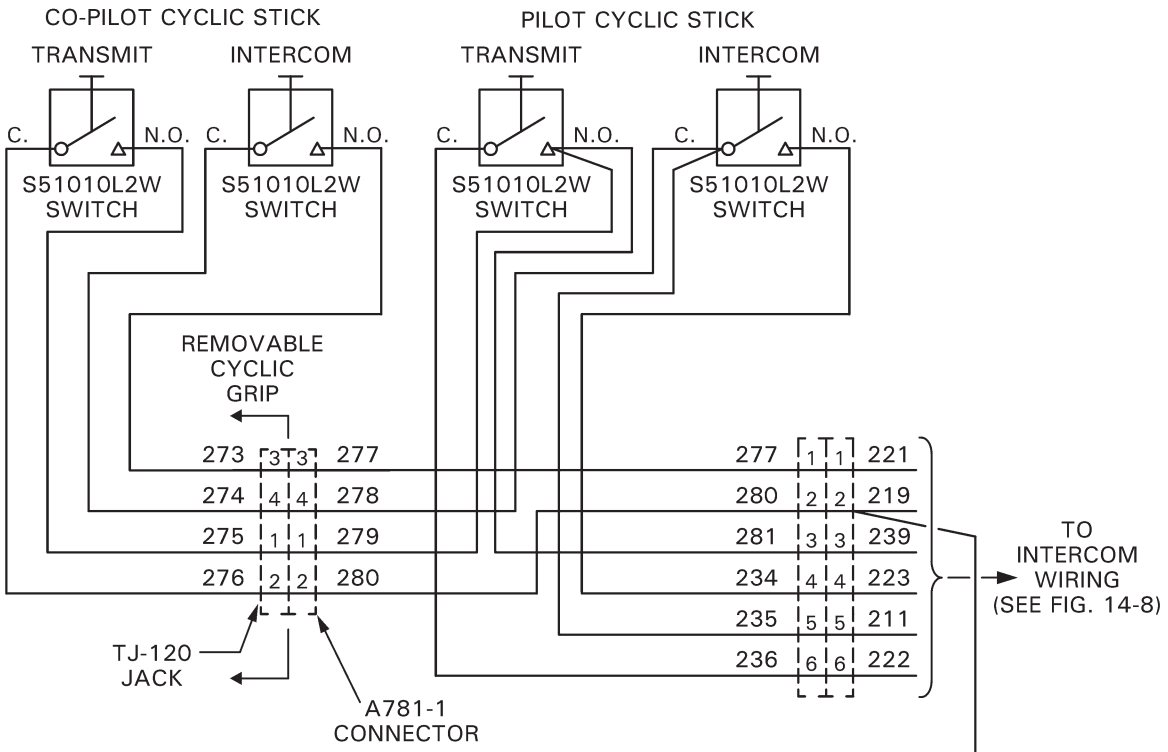

FIGURE 14-8A INTERCOM SCHEMATIC WITH REMOVABLE CYCLIC GRIP (EARLIER SHIPS)

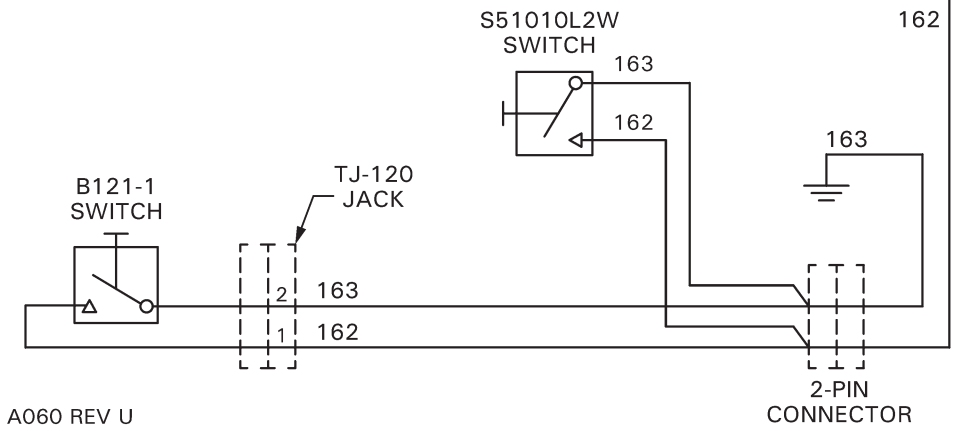

FIGURE 14-8B REMOTE CYCLIC SWITCH WIRING DIAGRAM (R22 MARINER; EARLIER SHIPS)

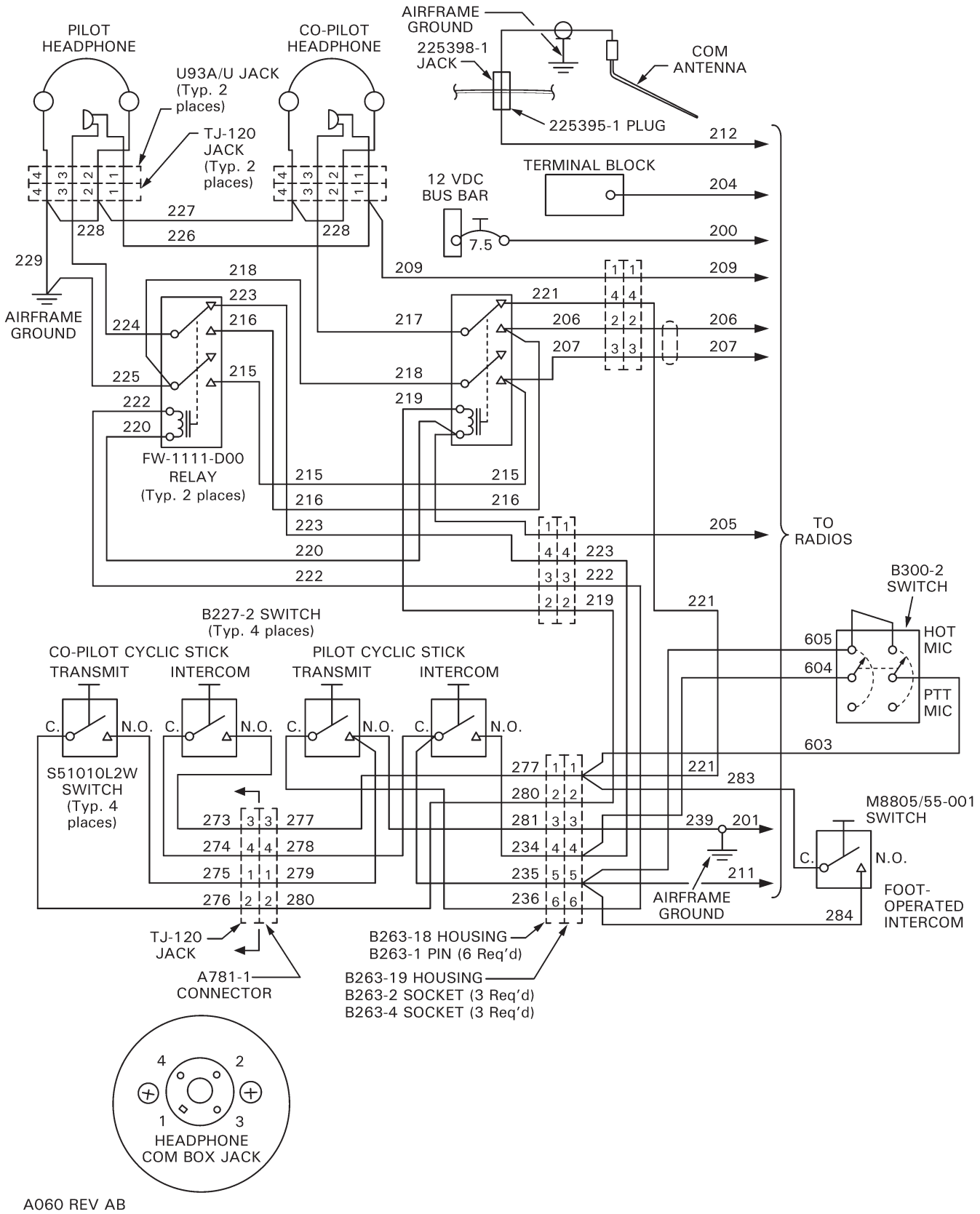

FIGURE 14-8C INTERCOM SCHEMATIC WITH HOT MIC SWITCH (EARLIER SHIPS)

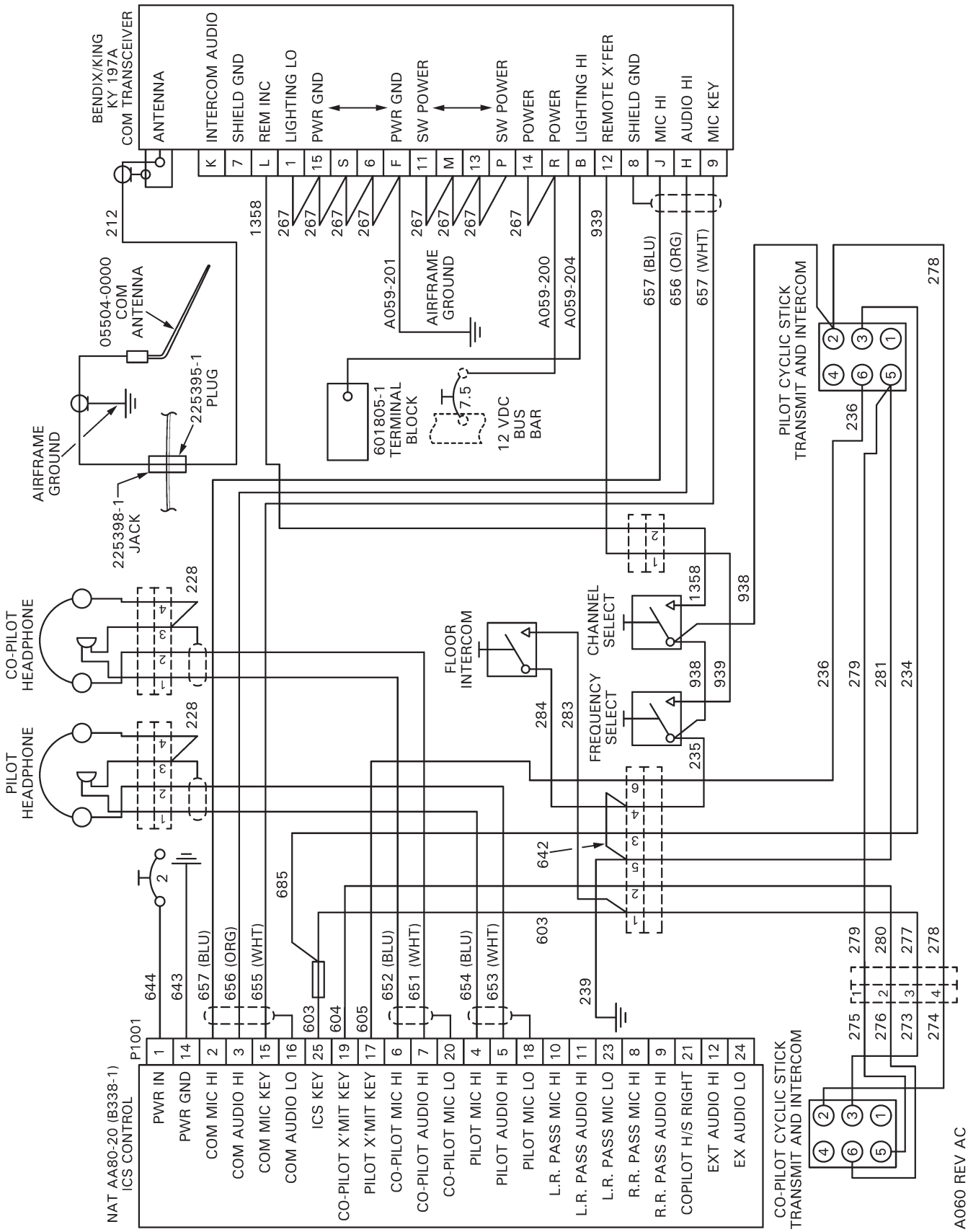

FIGURE 14-8D INTERCOM SCHEMATIC WITH B338-1 (NAT AA80-020) ICS CONTROL
(SHIP S/N 2967 & ON; EARLIER SHIPS)

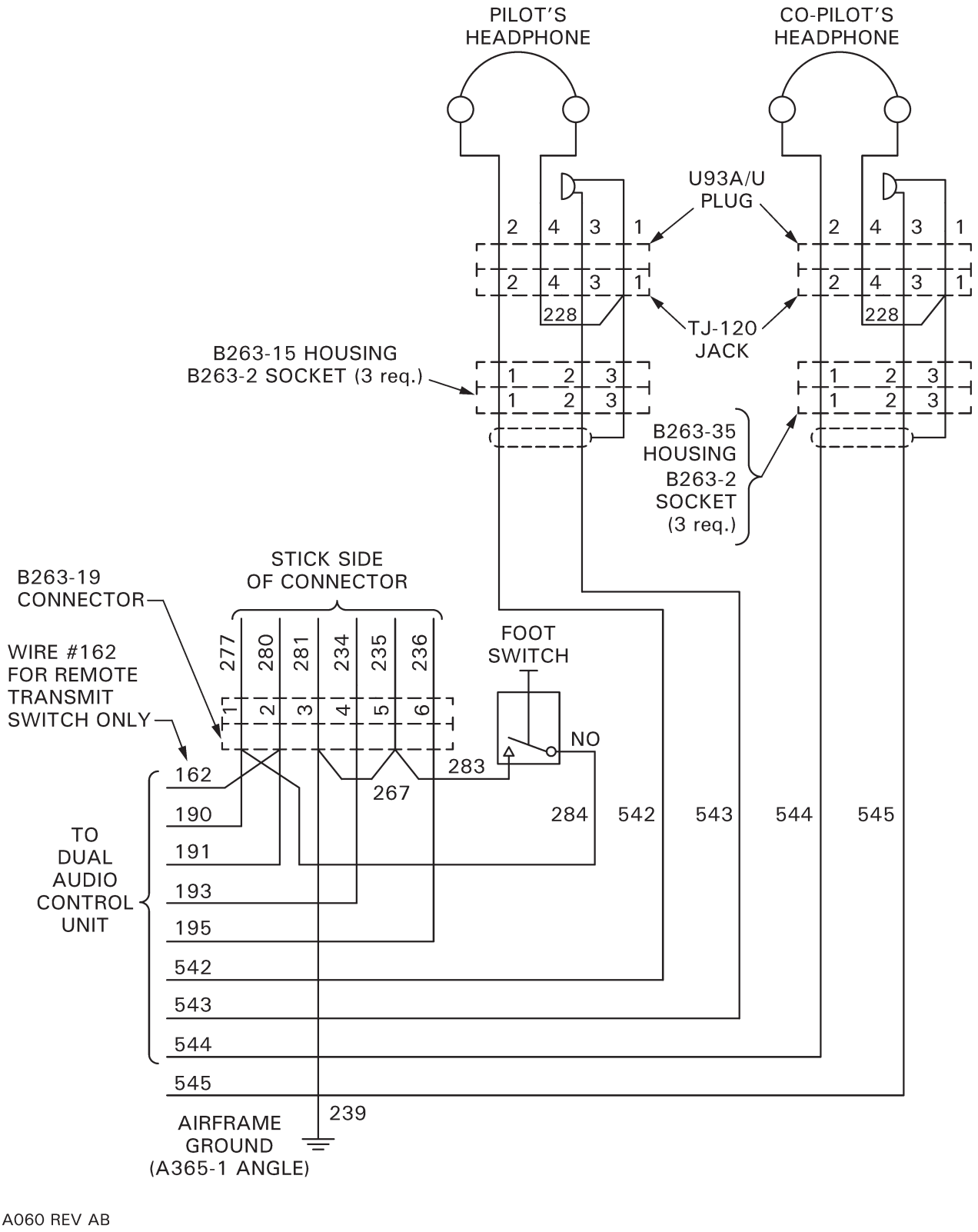

FIGURE 14-8E DUAL AUDIO CONTROL INTERCOM SCHEMATIC
(FOR R22s WITH A692-3 [AIR COMM ACS 300] DUAL AUDIO CONTROL; EARLIER SHIPS)

14.800 AVIONICS SCHEMATICS (cont'd)

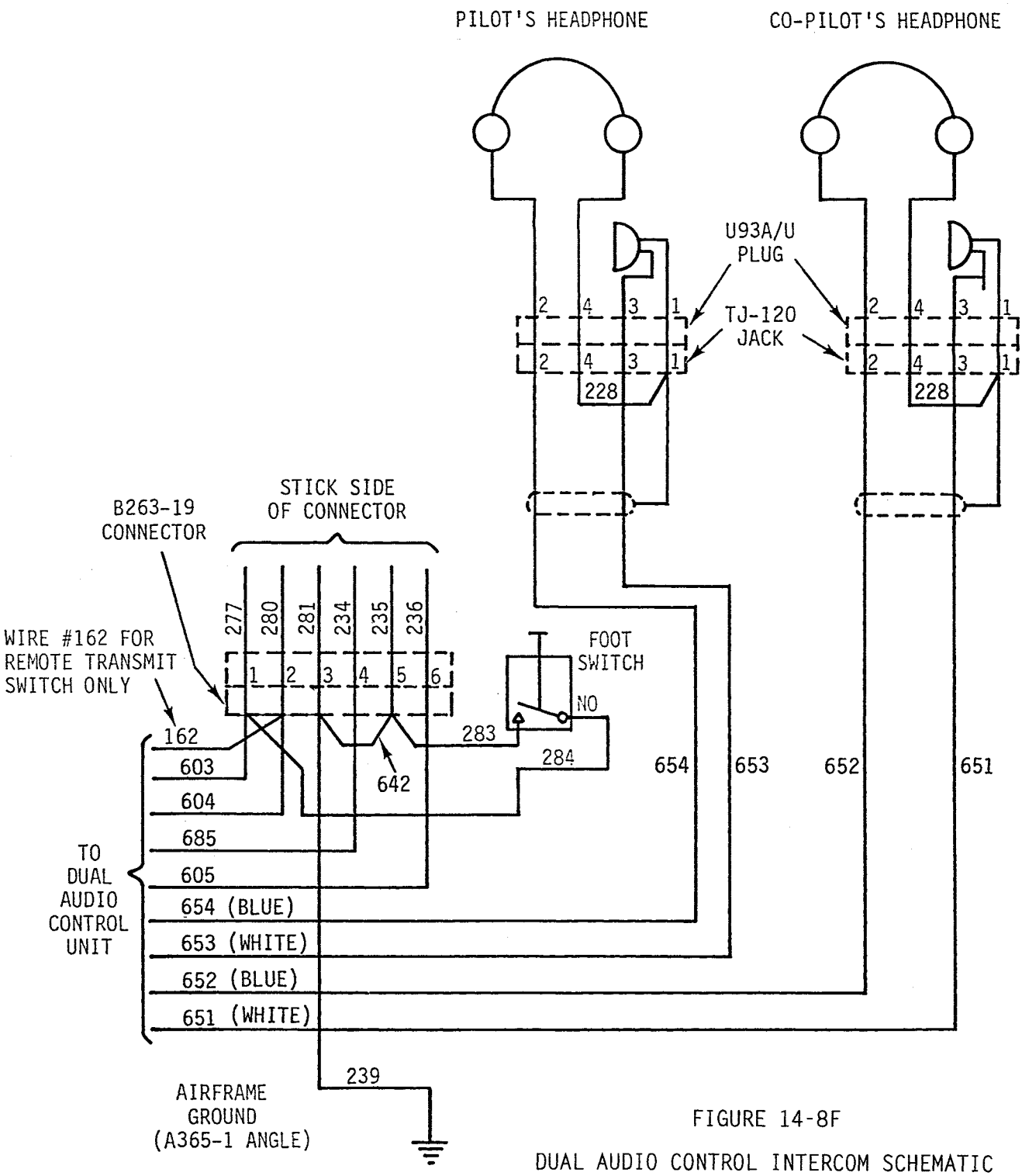

FIGURE 14-8F

DUAL AUDIO CONTROL INTERCOM SCHEMATIC (For R22s with AIR COMM ACS 300* Dual Audio Control with NAT AA80-020** ICS Control; Ship S/N 2967 and on.)

*RHC part no. A692-3.
**RHC part no. B338-1.

14.800 AVIONICS SCHEMATICS (cont'd)

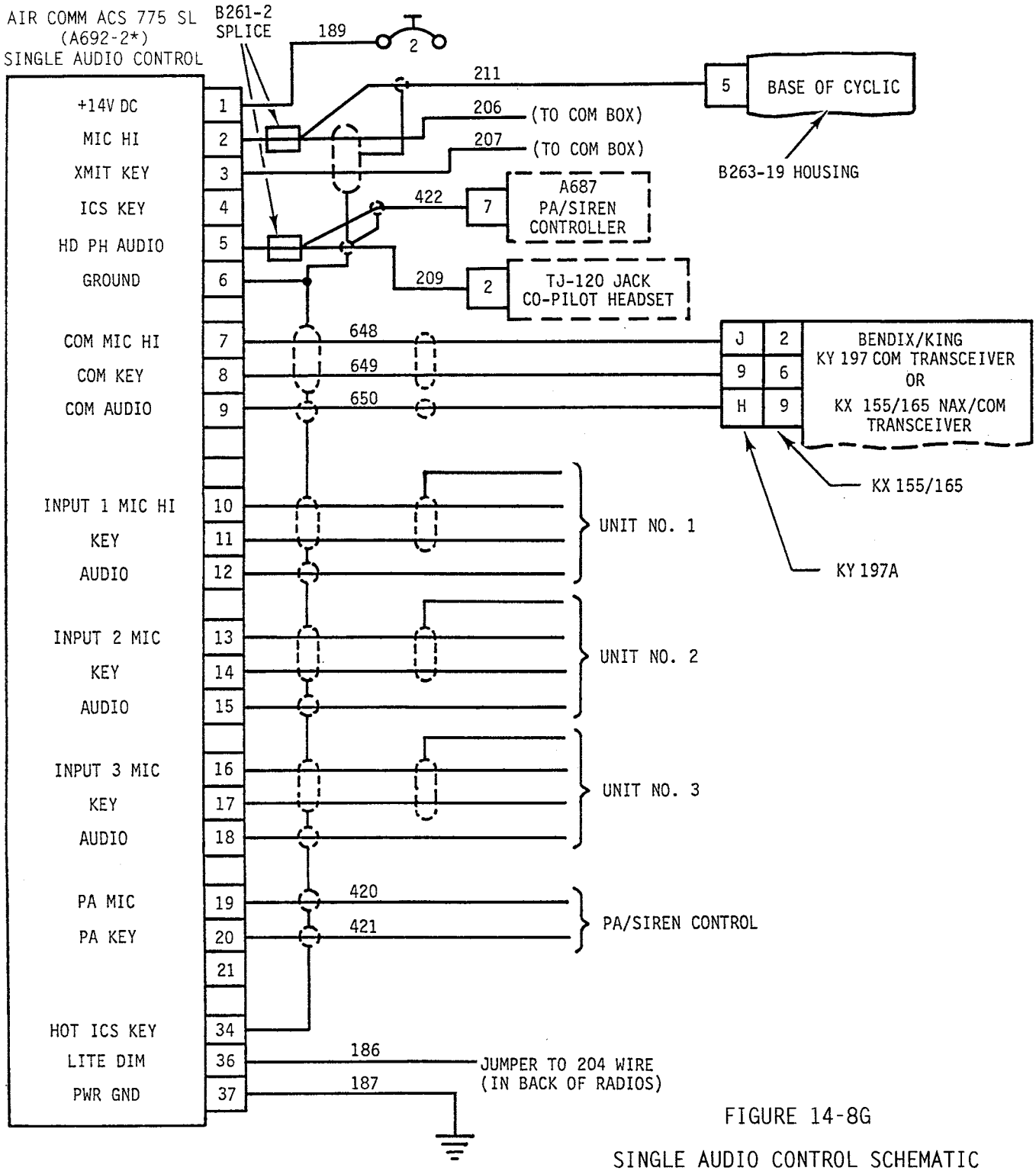

FIGURE 14-8G

SINGLE AUDIO CONTROL SCHEMATIC
AIR COMM ACS 775 SL (A692-2*)
(Ship S/N 2967 and on)

*RHC part no.

14.800 AVIONICS SCHEMATICS (cont'd)

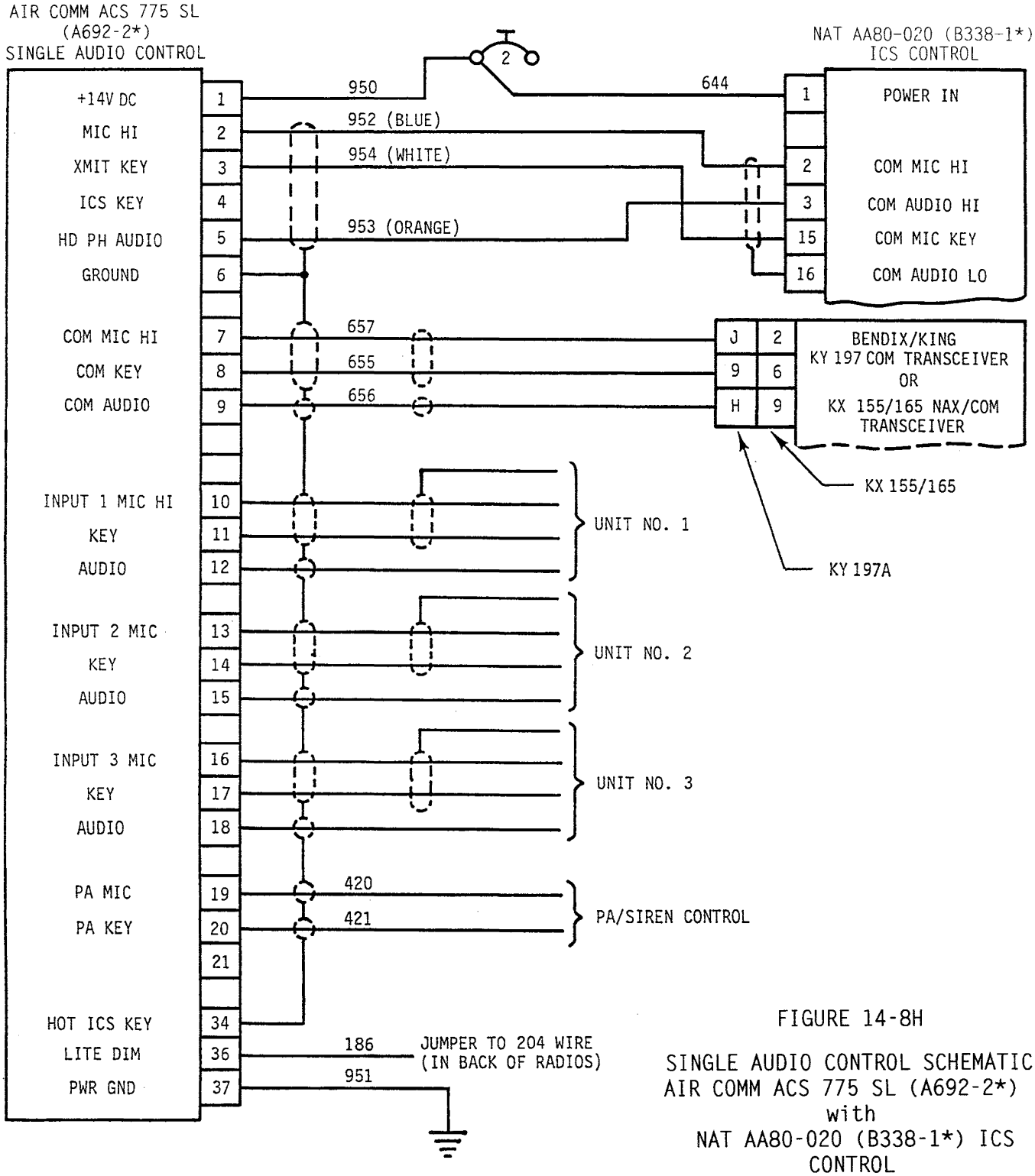

FIGURE 14-8H

SINGLE AUDIO CONTROL SCHEMATIC
AIR COMM ACS 775 SL (A692-2*)
with
NAT AA80-020 (B338-1*) ICS
CONTROL
(Ship S/N 2967 and on)

*RHC part no.

14.800 AVIONICS SCHEMATICS (cont'd)

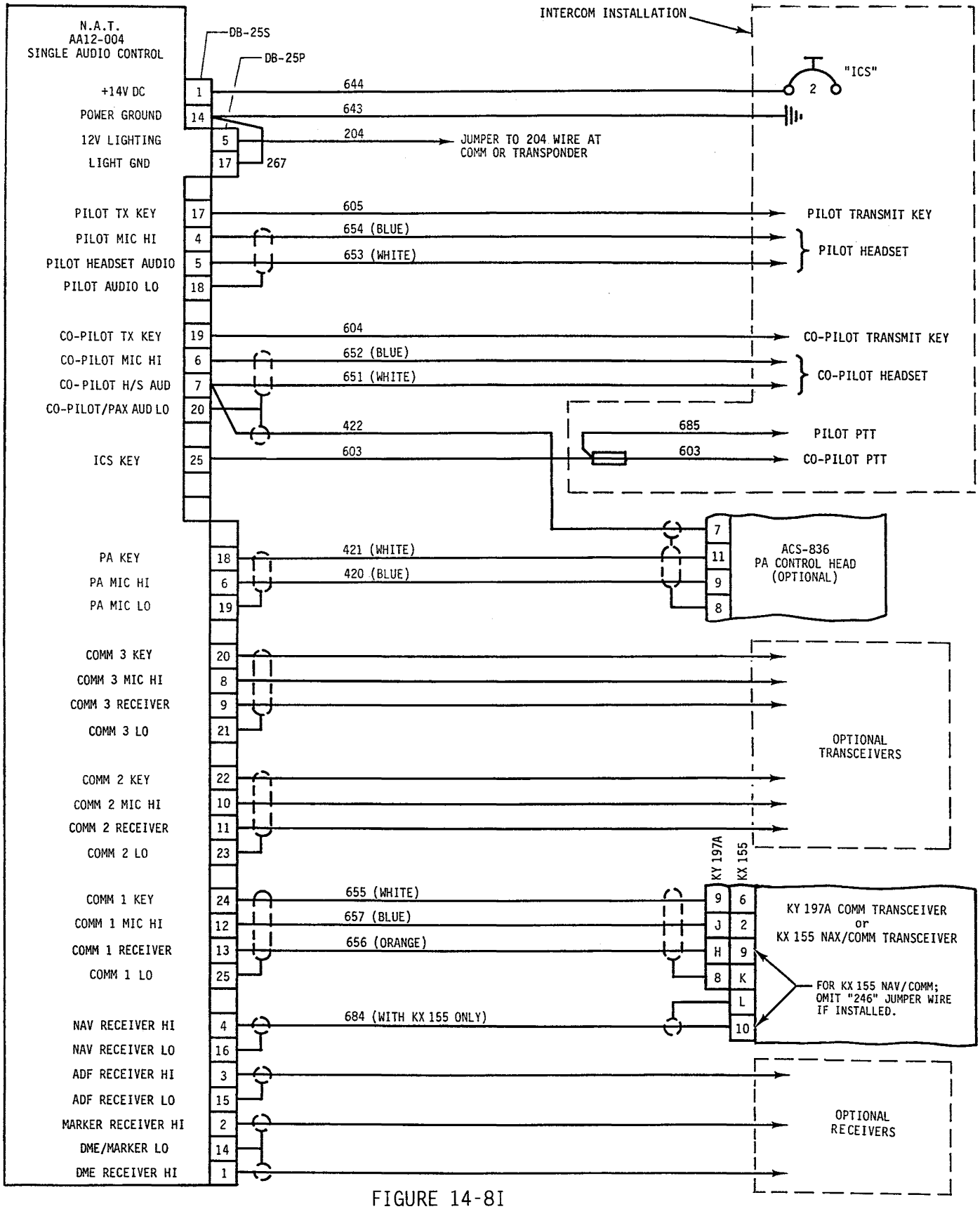

FIGURE 14-8I

NAT AA12-004 SINGLE AUDIO CONTROL SCHEMATIC
(Ship S/N 2967 and on)

14.800 AVIONICS SCHEMATICS (cont'd)

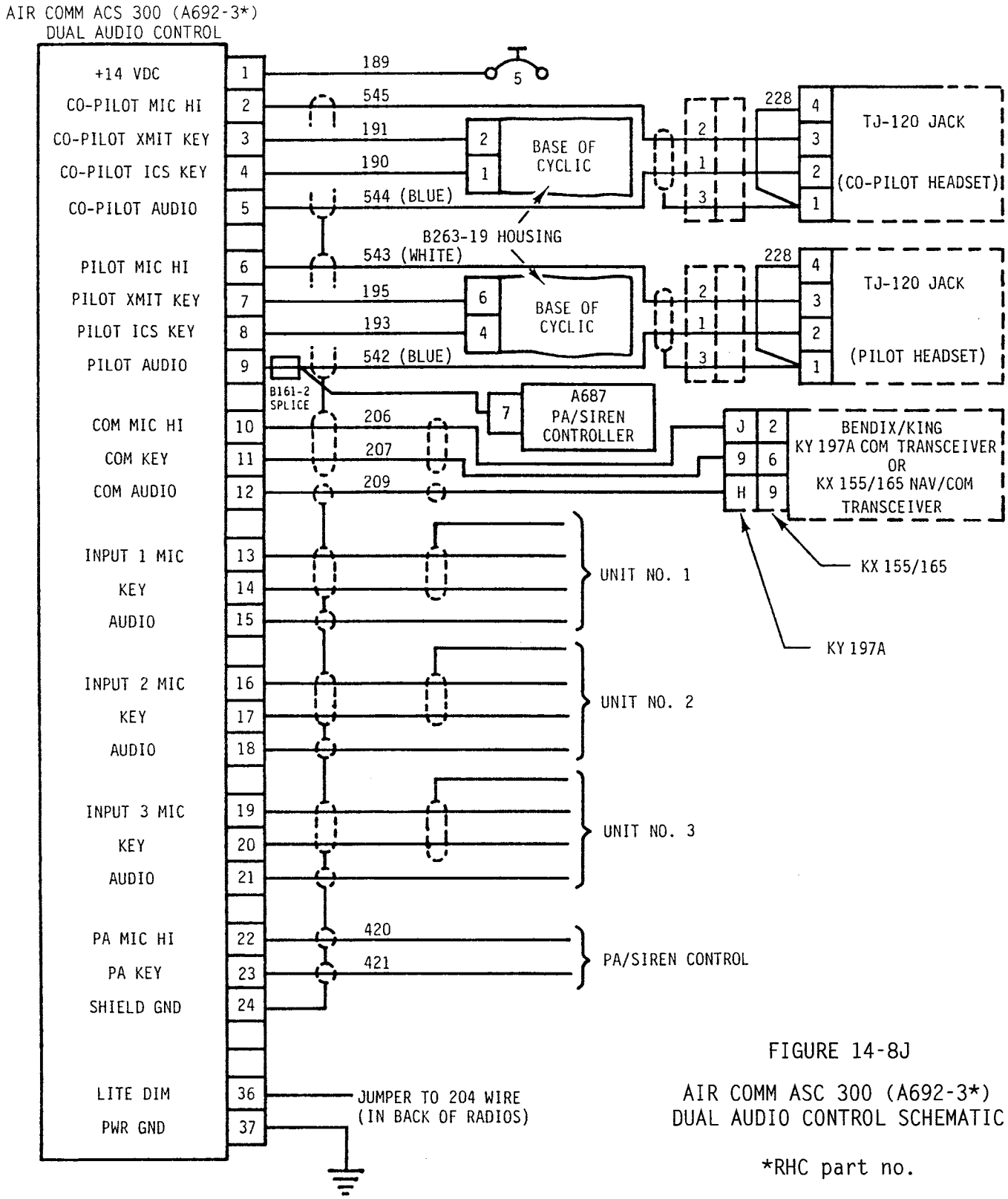

FIGURE 14-8J

AIR COMM ASC 300 (A692-3*)
DUAL AUDIO CONTROL SCHEMATIC

*RHC part no.

14.800 AVIONICS SCHEMATICS (cont'd)

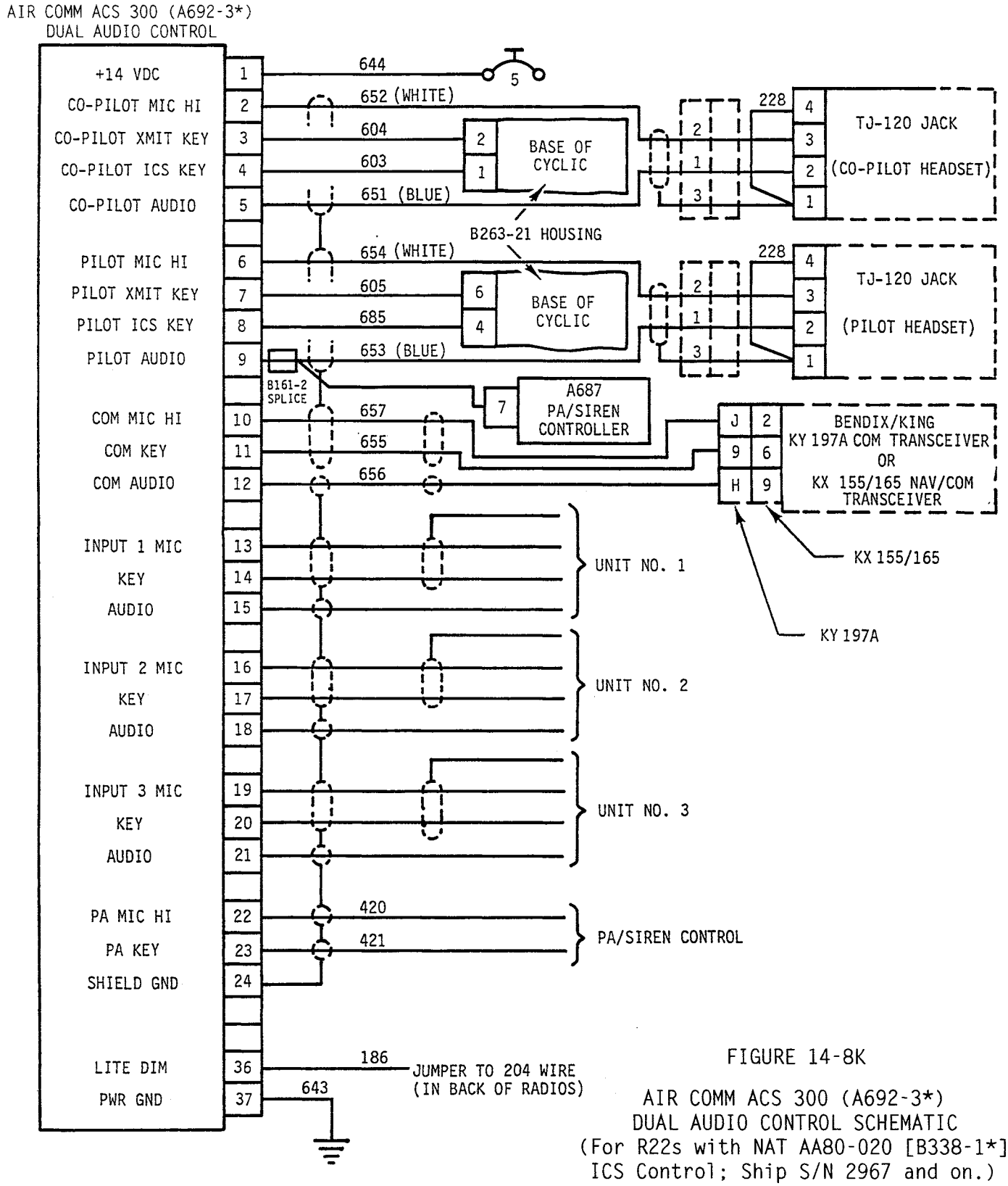

FIGURE 14-8K

AIR COMM ACS 300 (A692-3*)
DUAL AUDIO CONTROL SCHEMATIC
(For R22s with NAT AA80-020 [B338-1*]
ICS Control; Ship S/N 2967 and on.)

*RHC part no.

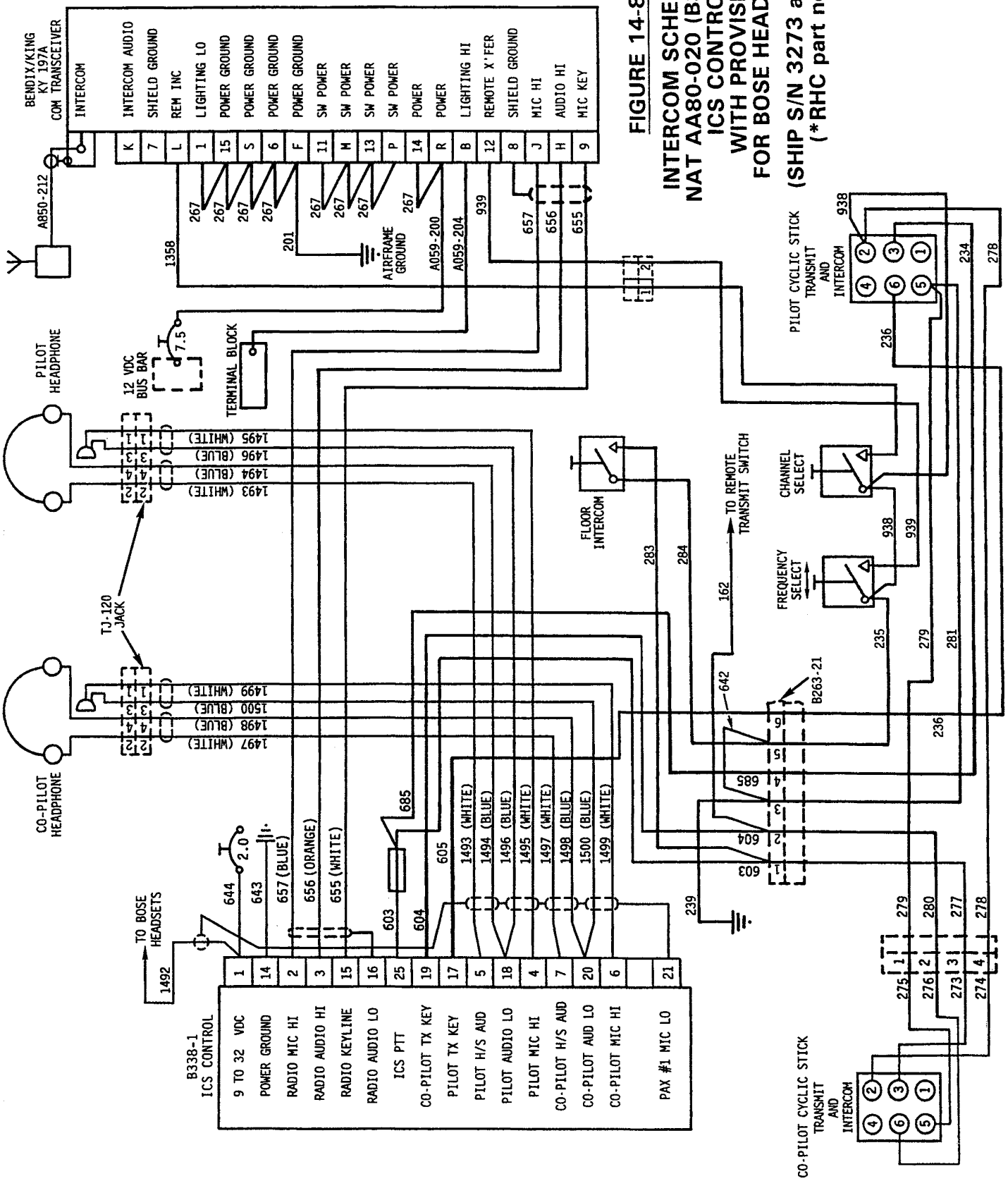

FIGURE 14-8L
INTERCOM SCHEMATIC
NAT AA80-020 (B338-1*)
ICS CONTROL
WITH PROVISION
FOR BOSE HEADSETS
(SHIP S/N 3273 and on)
(*RHC part no.)

INTENTIONALLY BLANK

14.800 (cont'd)

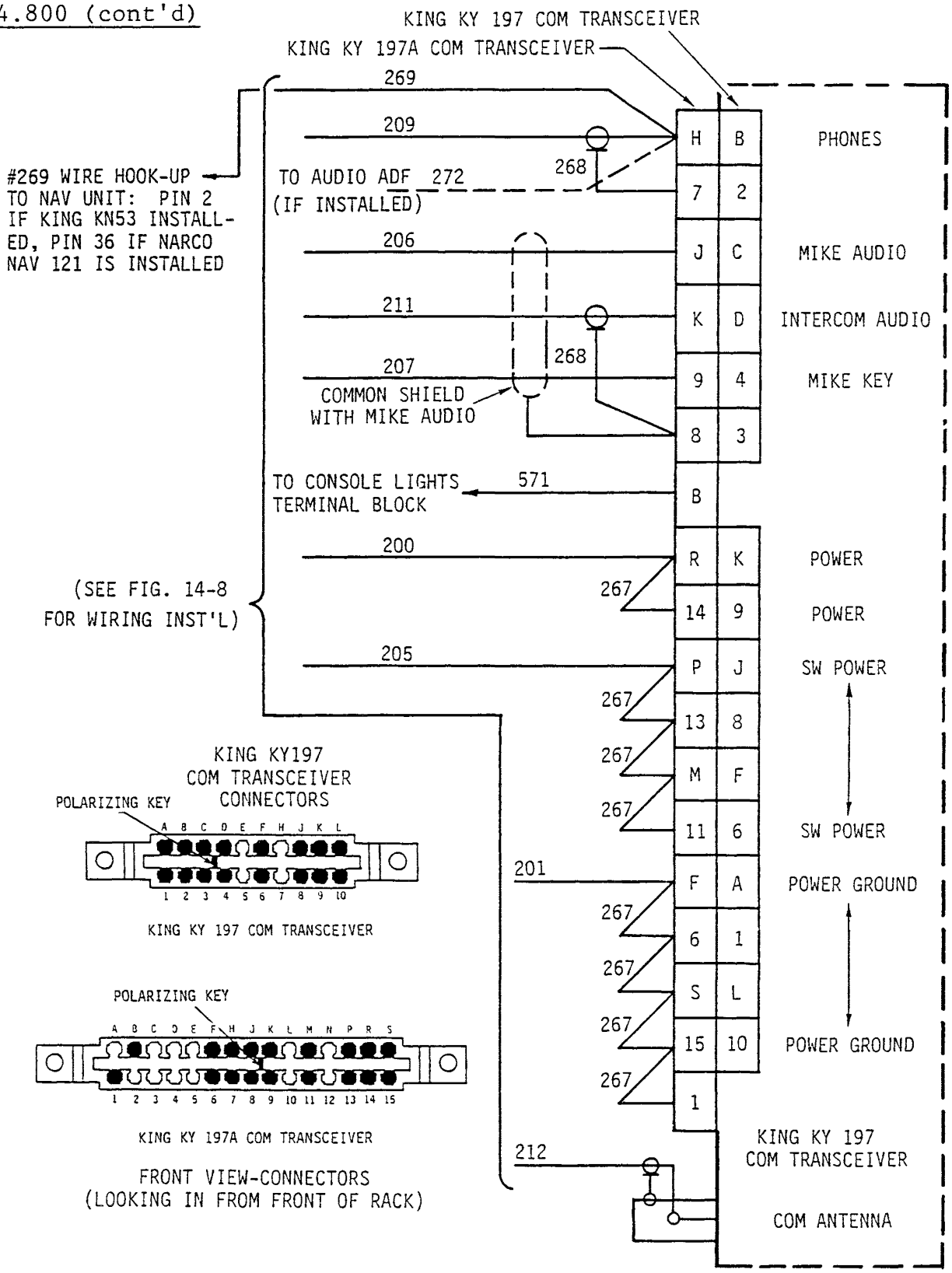

FIGURE 14-9 KING KY197/197A COM TRANSCEIVER

14.800 (cont'd)

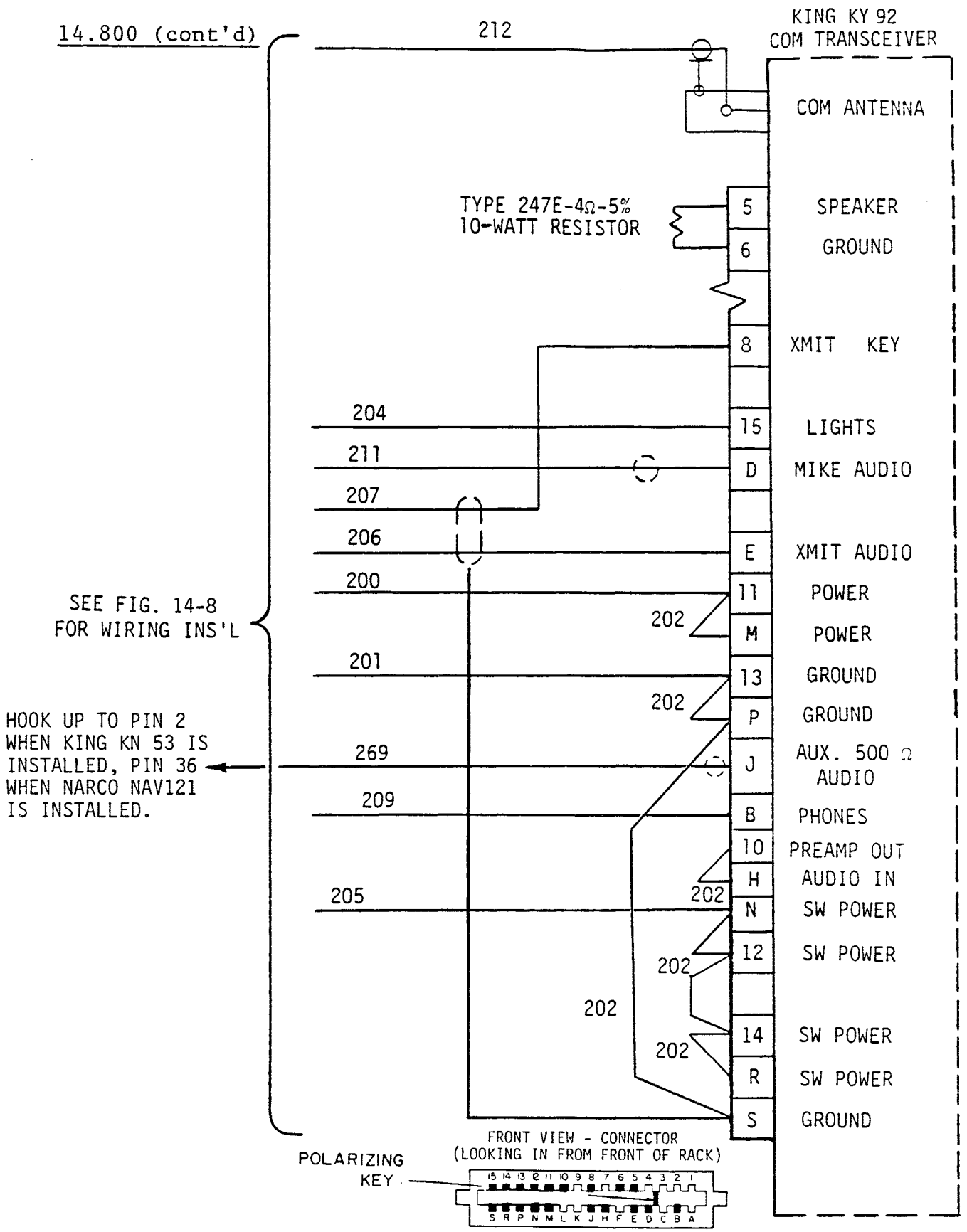

FIGURE 14-10 KING KY92 COM TRANSCEIVER

14.800 (cont'd)

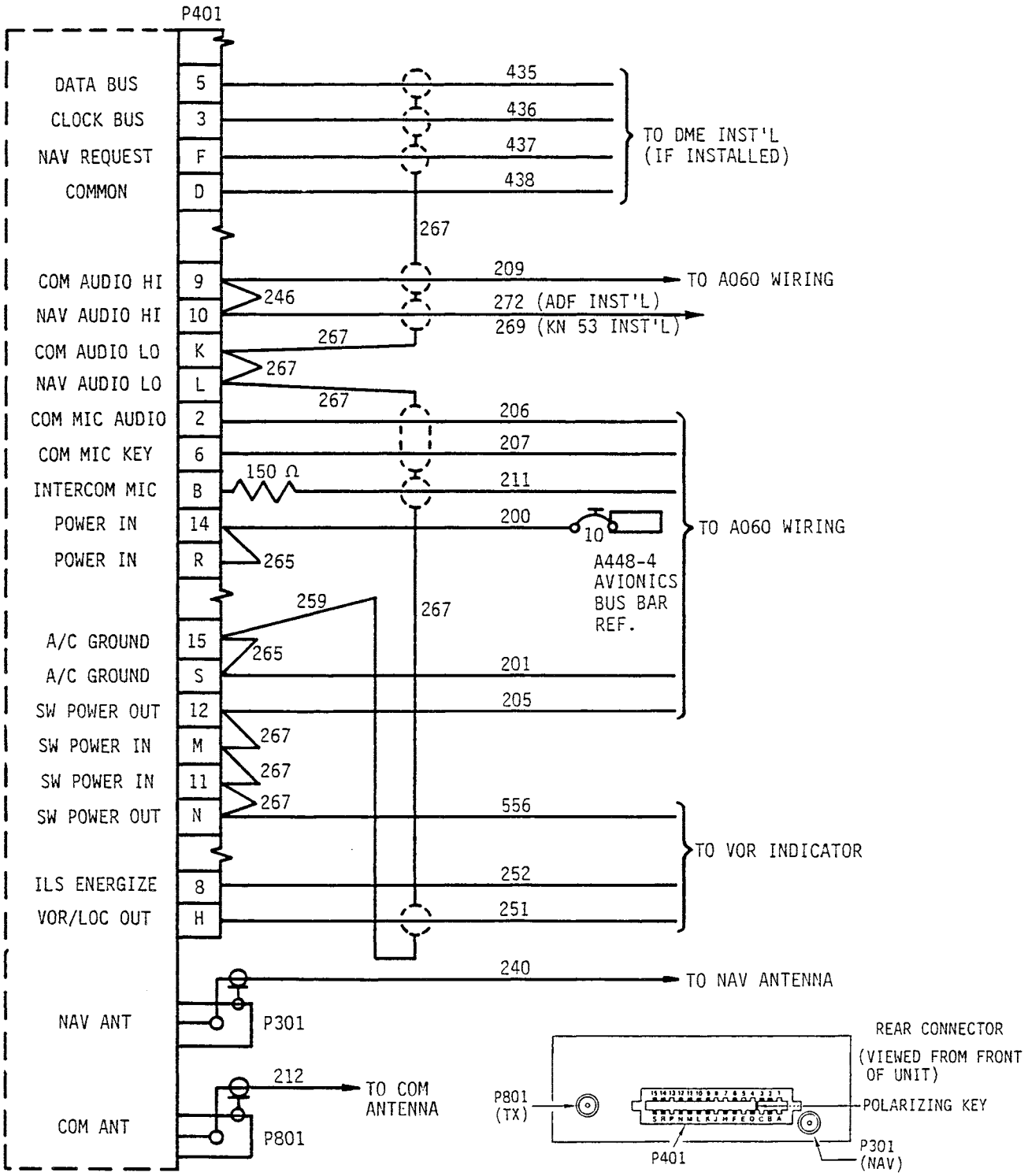

FIGURE 14-10A KING KX155 VHF NAV COM TRANSCEIVER

This page intentionally left blank.

14.800 (cont'd)

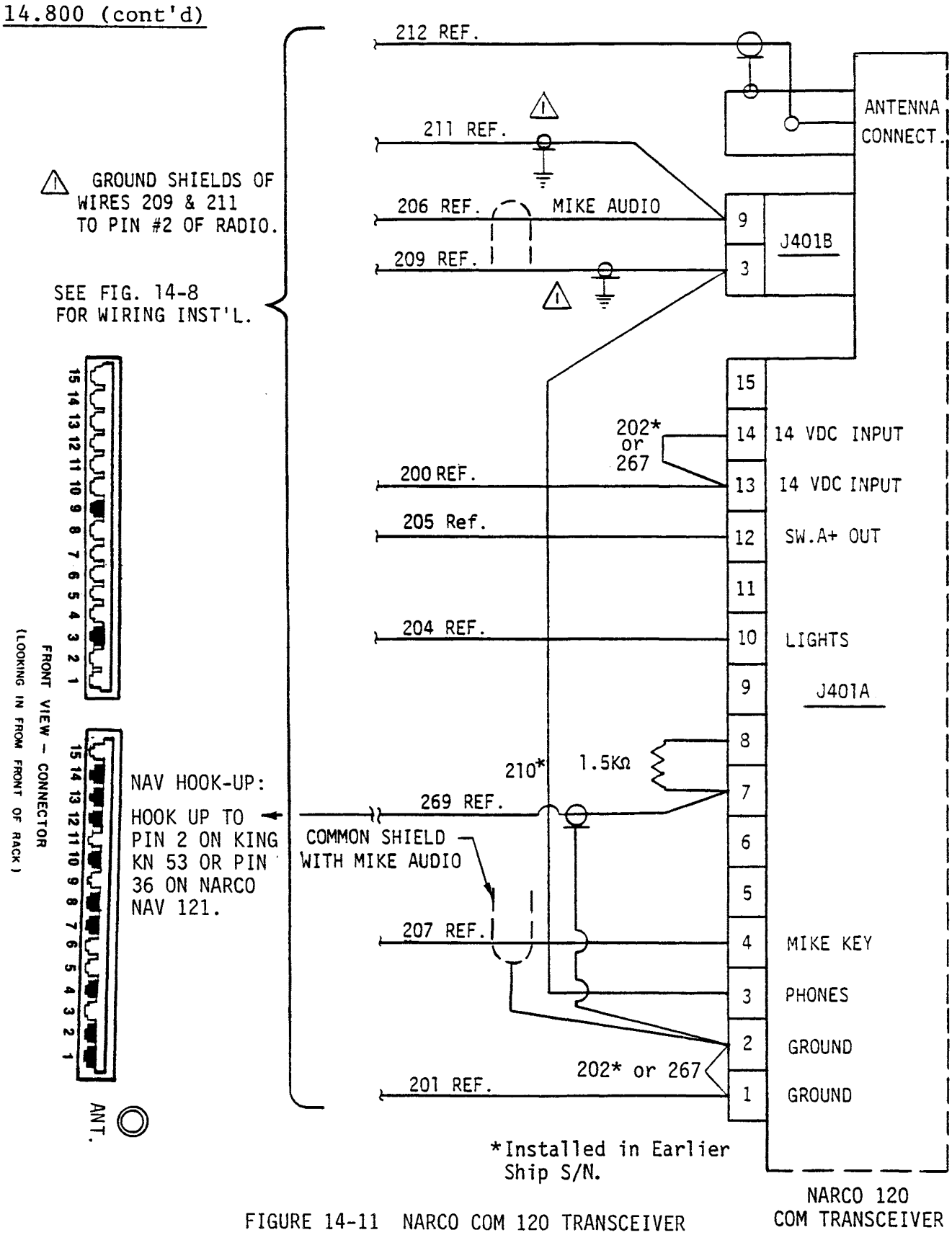

FIGURE 14-11 NARCO COM 120 TRANSCEIVER

14.800 (cont'd)

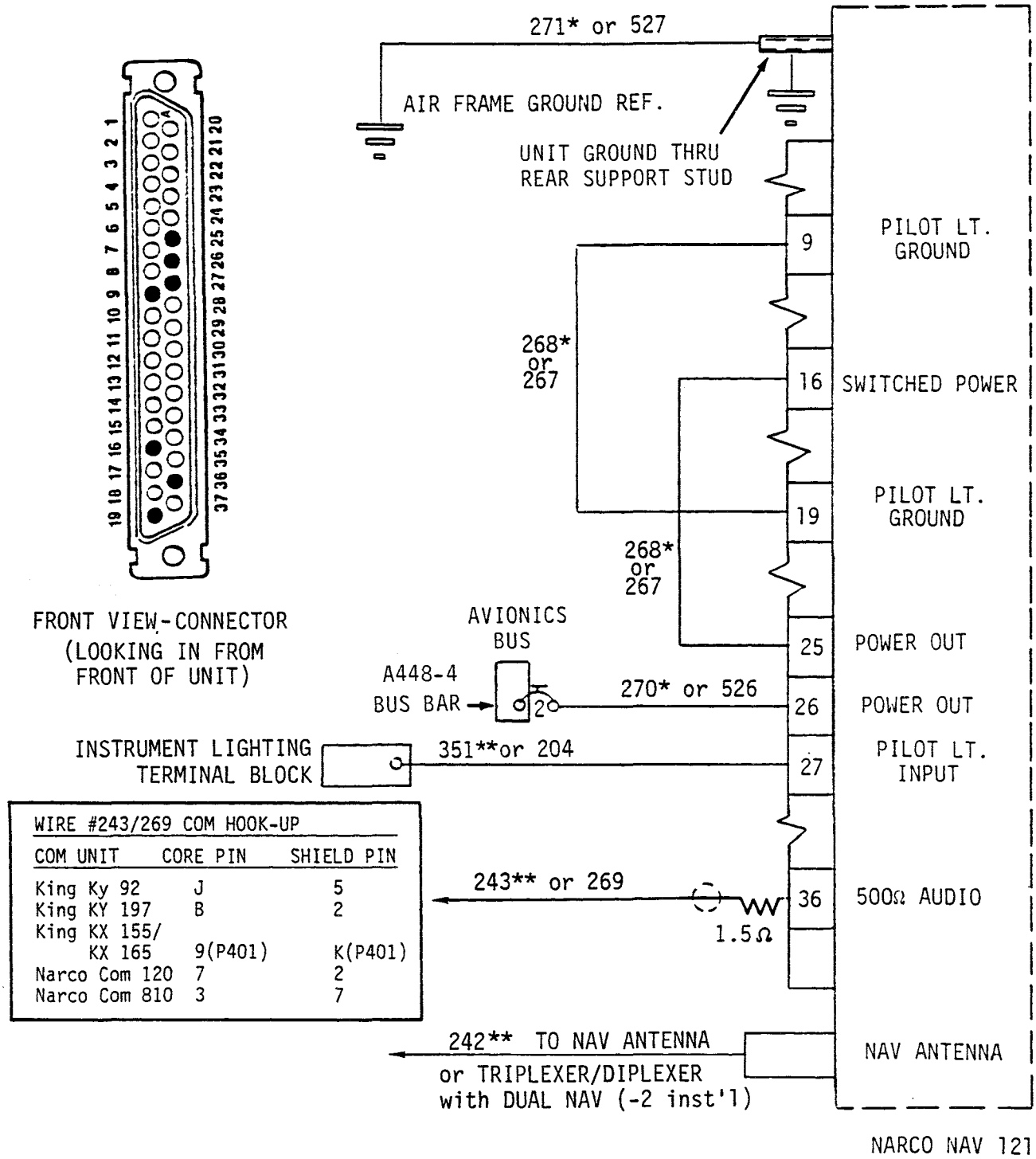

WIRE #243/269 COM HOOK-UP

COM UNIT	CORE PIN	SHIELD PIN
King Ky 92	J	5
King KY 197	B	2
King KX 155/ KX 165	9(P401)	K(P401)
Narco Com 120	7	2
Narco Com 810	3	7

*Installed in earlier Ship S/N's.
**10-Hole Upper Console

FIGURE 14-12 NARCO NAV 121

14.800 (cont'd)

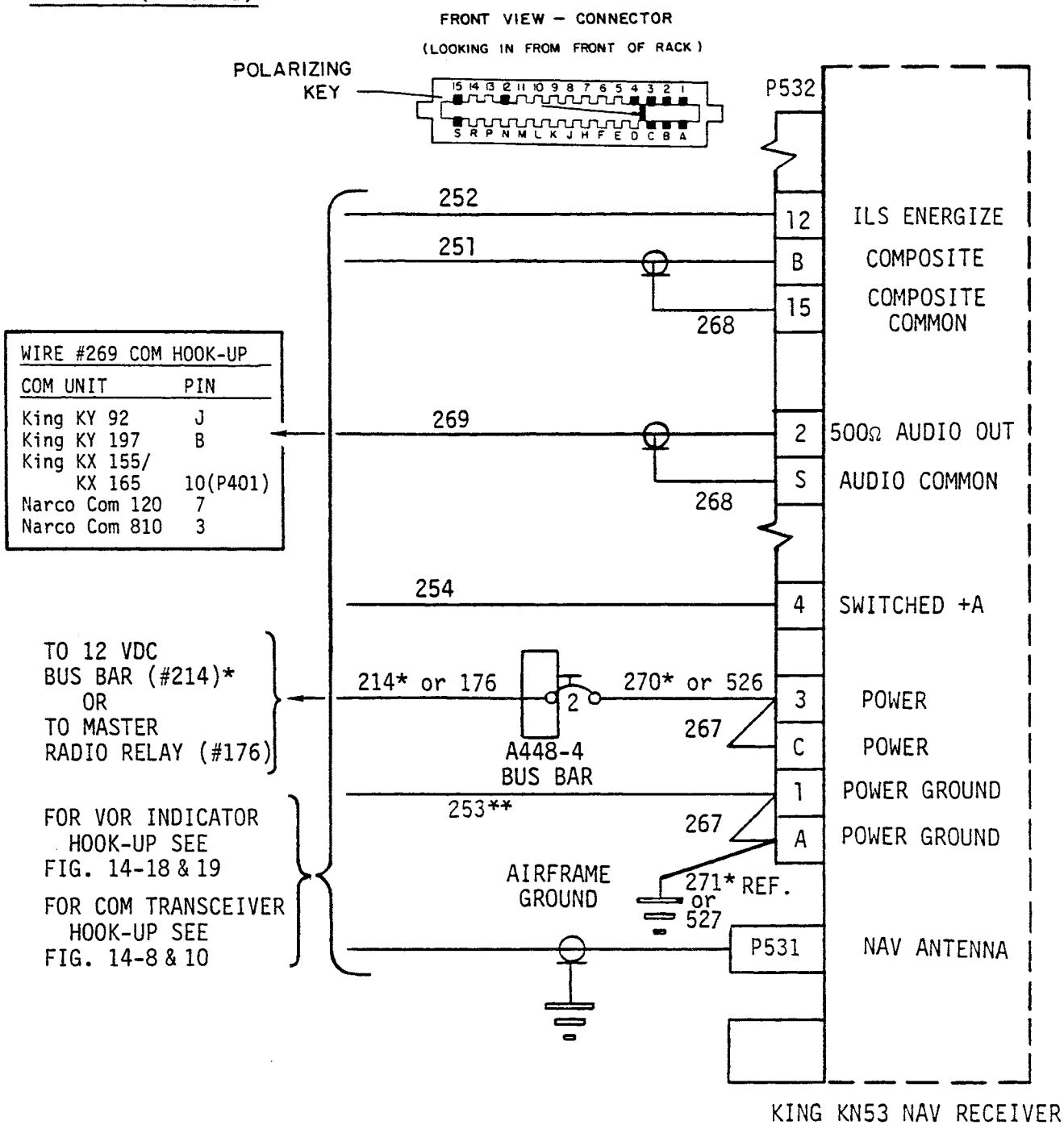

*Installed in Earlier Ship S/Ns.
See Page 14.14-15

**Wire #253 excluded after 3-86.

FIGURE 14-13 KING KN53 NAV RECEIVER

14.800 (cont'd)

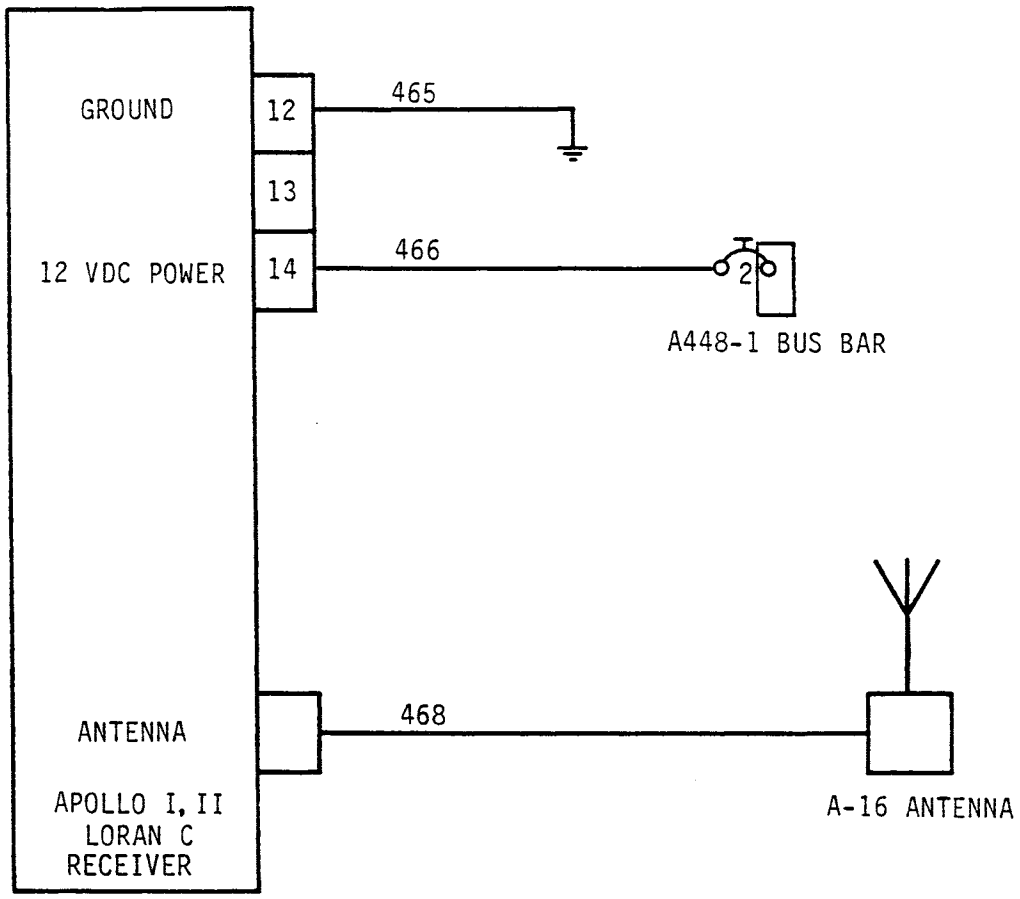

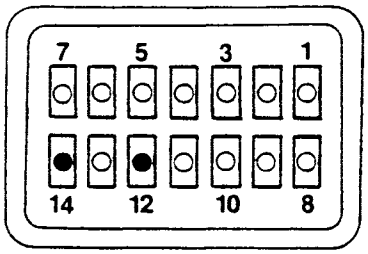

FRONT VIEW CONNECTOR

(LOOKING FROM REAR OF UNIT)

FIGURE 14-14 APOLLO I, II LORAN C RECEIVER

14.800 (cont'd)

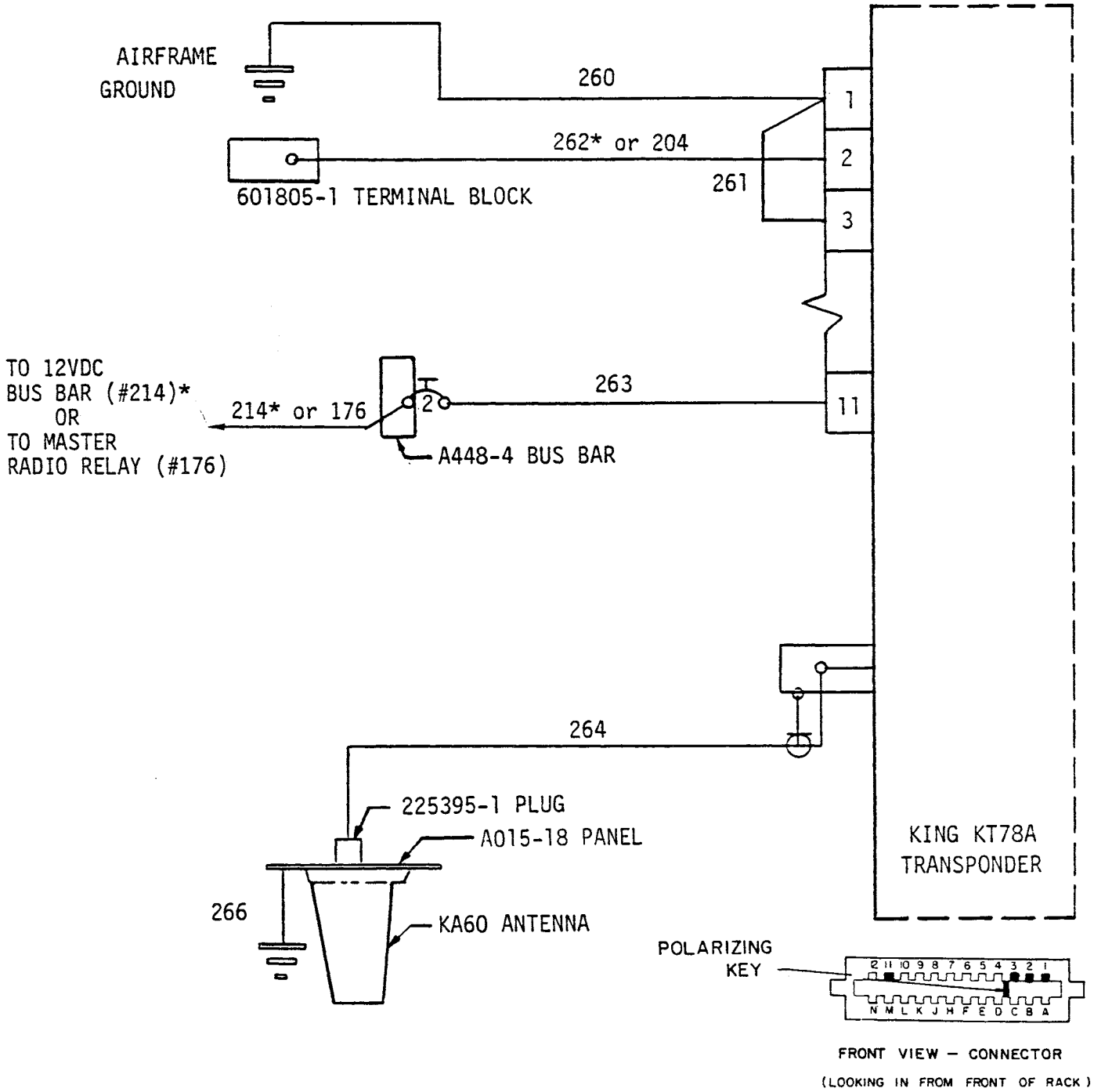

*Installed in Earlier Ship S/N's
See Page 14.14-15

FIGURE 14-15 KING KT76A/78A TRANSPONDER

14.800 (cont'd)

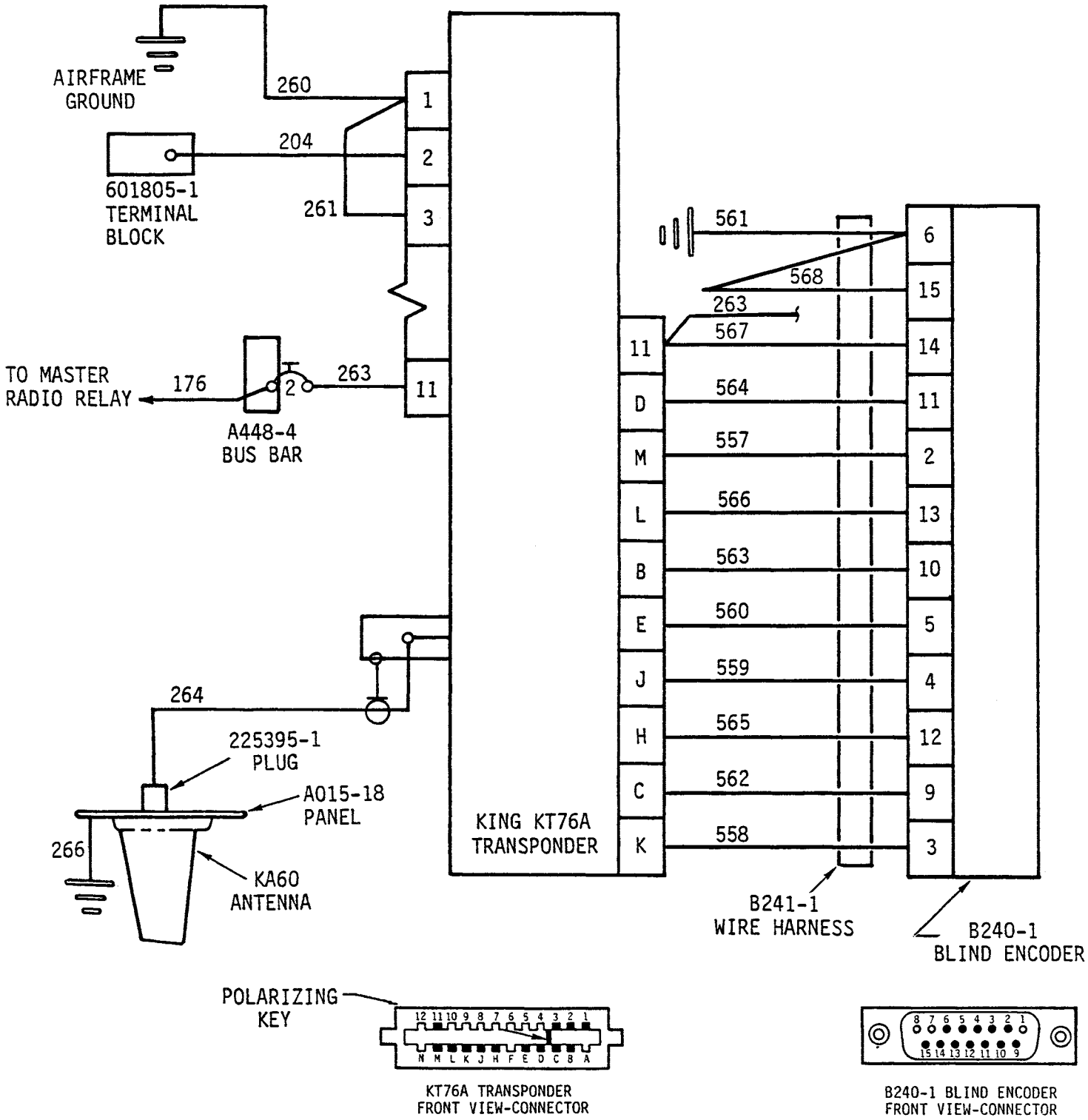

FIGURE 14-16 D120-P2-T BLIND ENCODER/DIGITIZER

14.800 (cont'd)

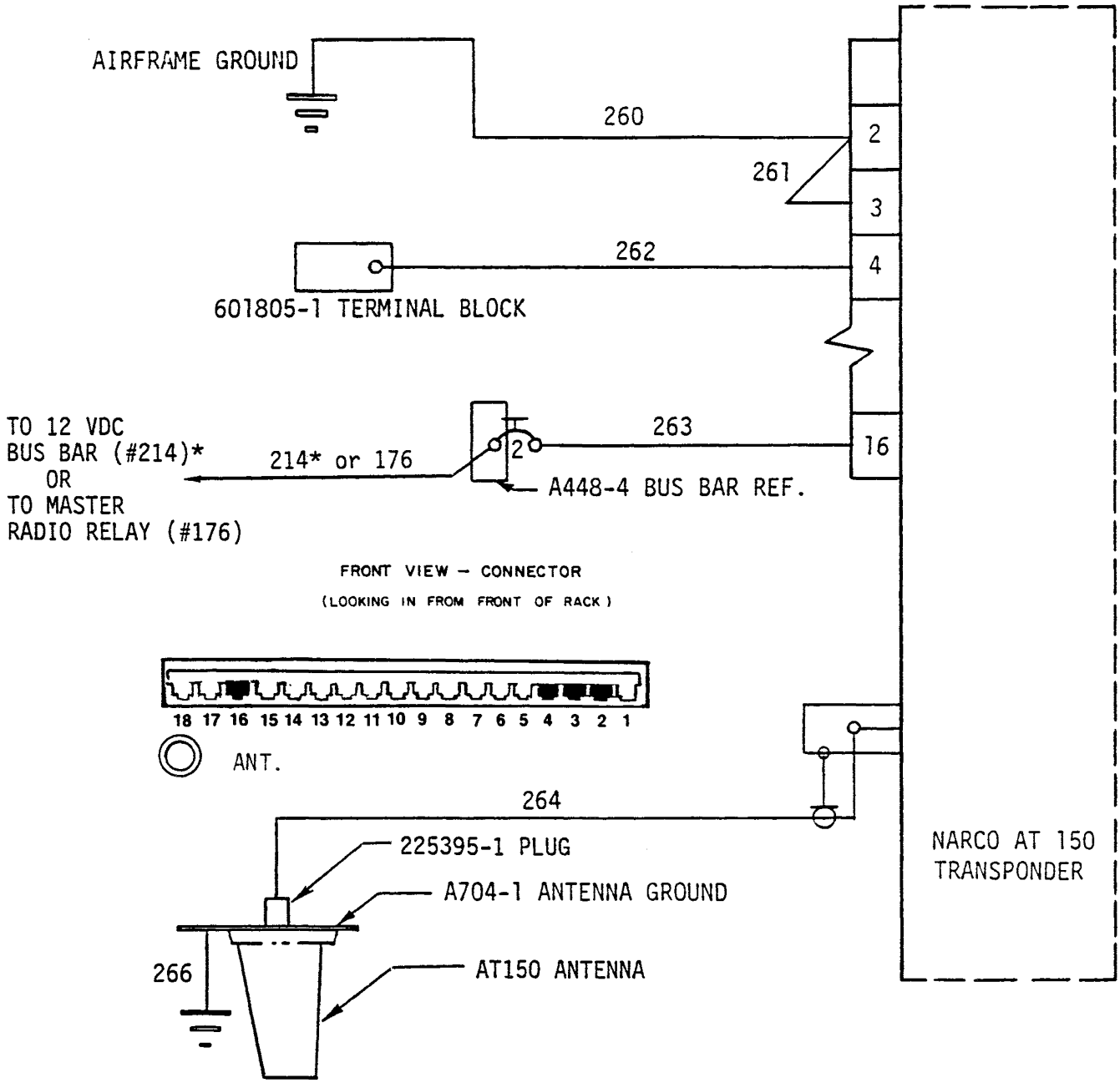

*Installed in Earlier Ship S/Ns. See Page 14.14-15

FIGURE 14-17 NARCO AT 150 TRANSPONDER

14.800 (cont'd)

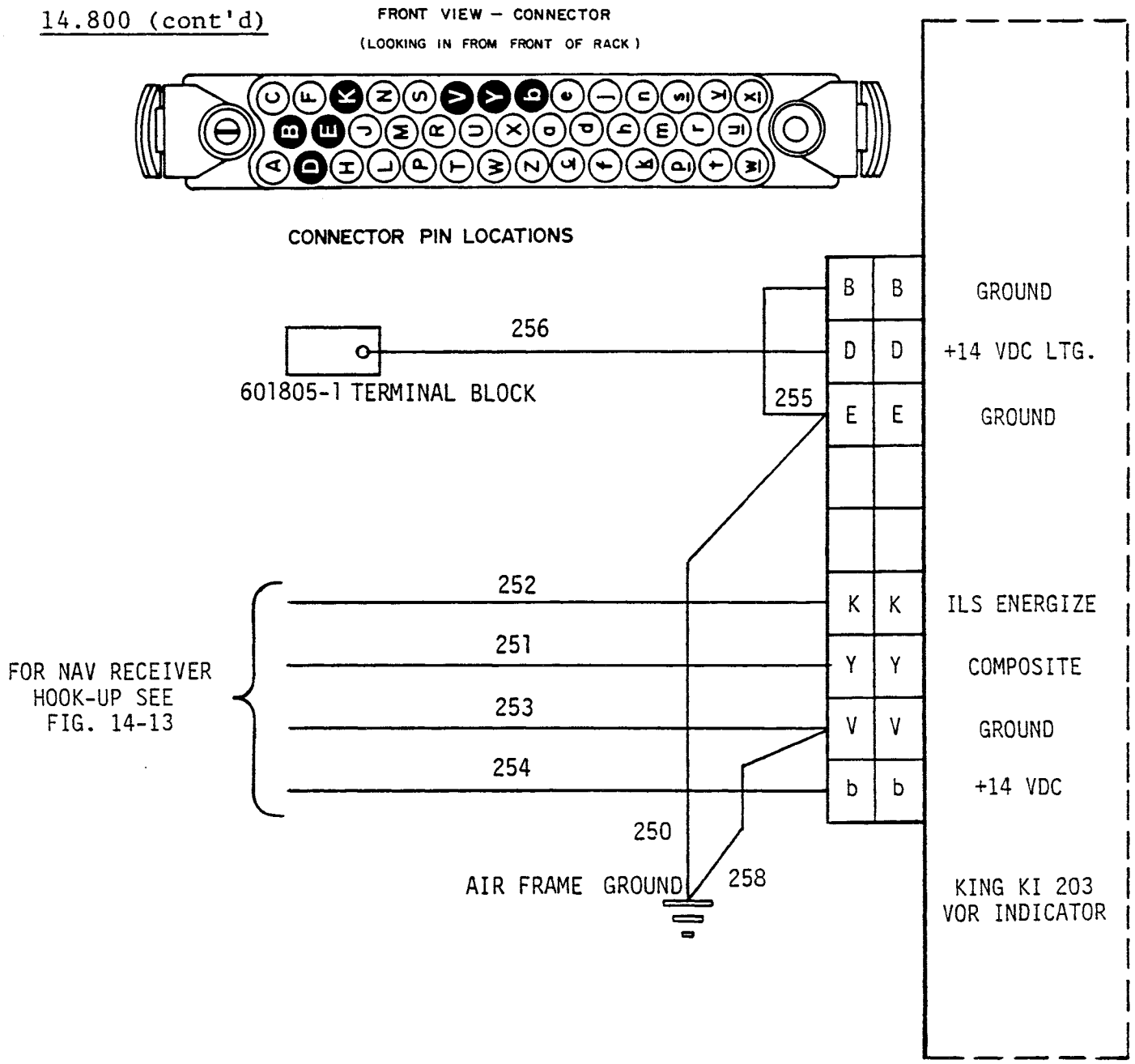

FIGURE 14-18 KING KI 203 VOR INDICATOR
(Installed Prior to 1/87)

14.800 (cont'd)

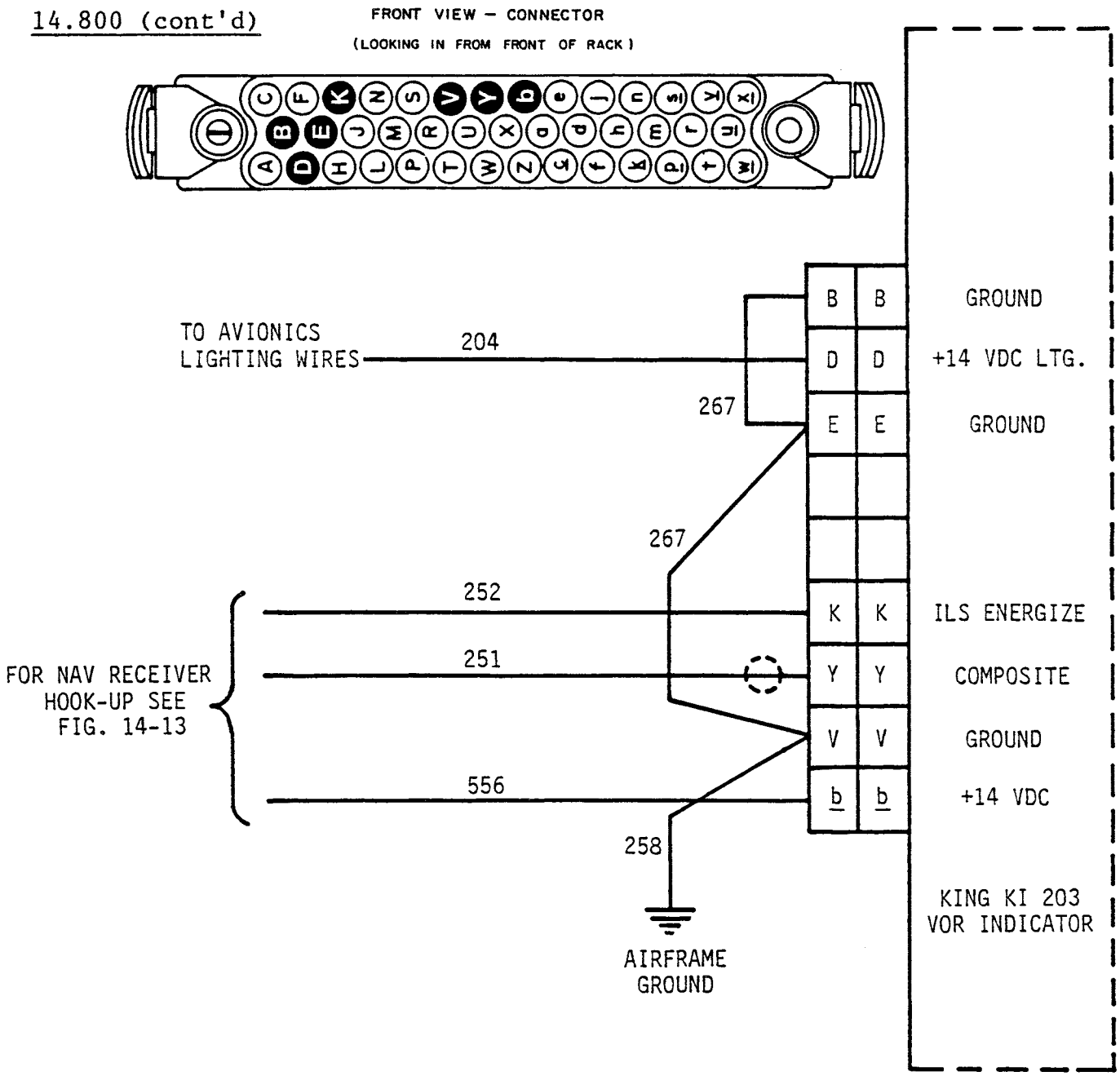

FIGURE 14-19 KING KI203 VOR INDICATOR
(Installed after 1/87)

14.800 (cont'd)

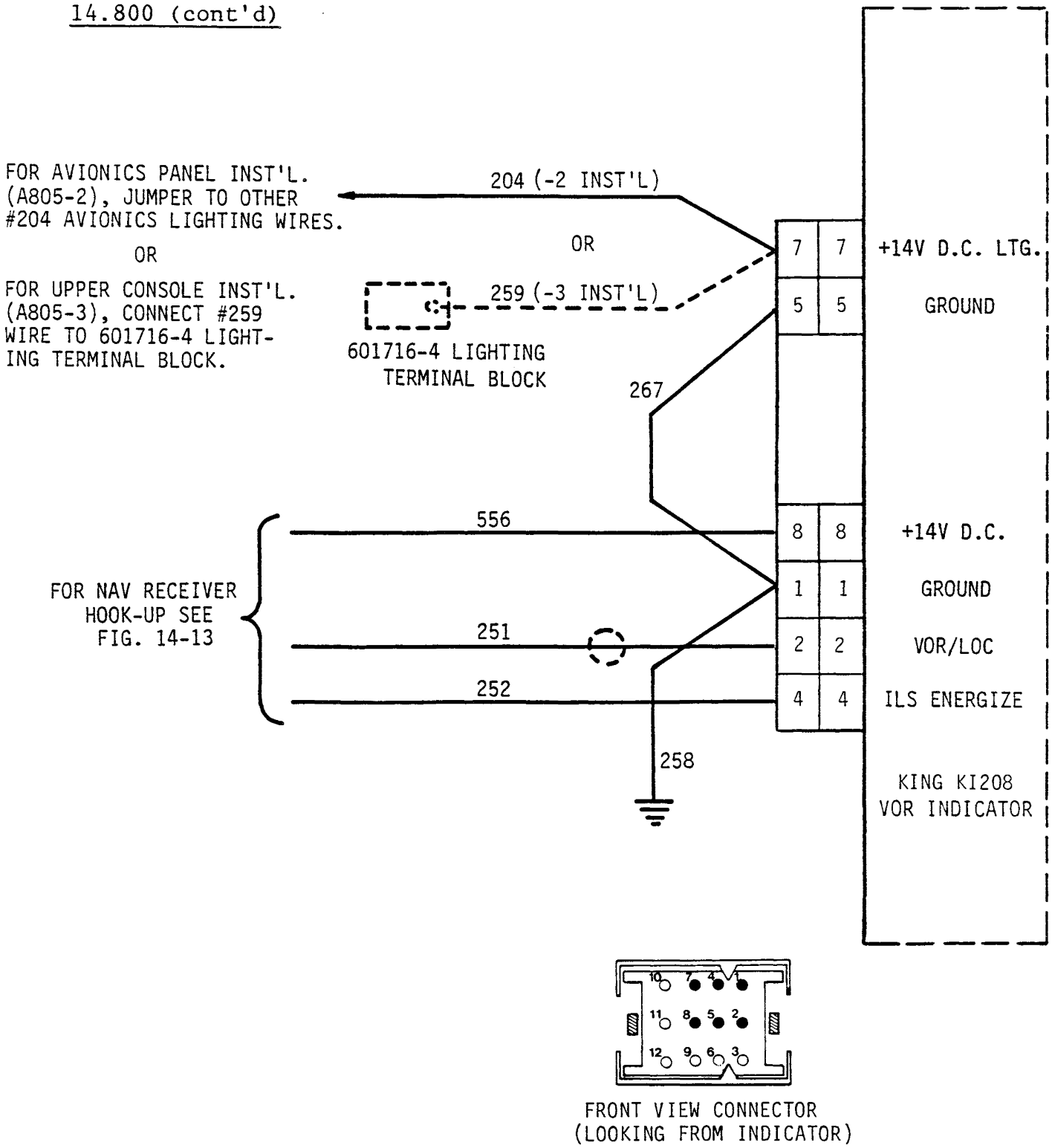

FIGURE 14-20 KING KI 208 VOR INDICATOR

14.800 (cont'd)

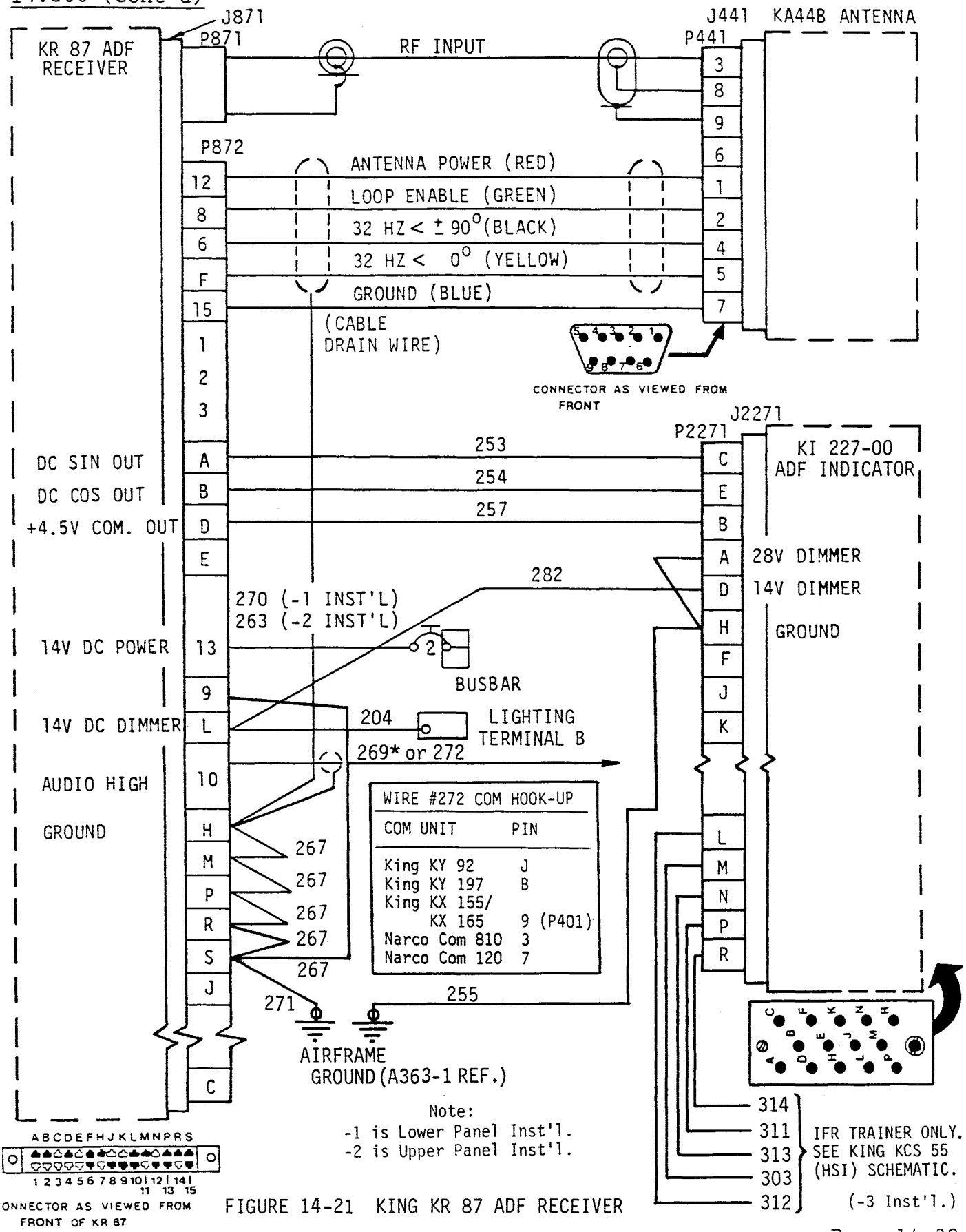

FIGURE 14-21 KING KR 87 ADF RECEIVER

*Installed in Earlier Ship S/N.

14.800 (cont'd)

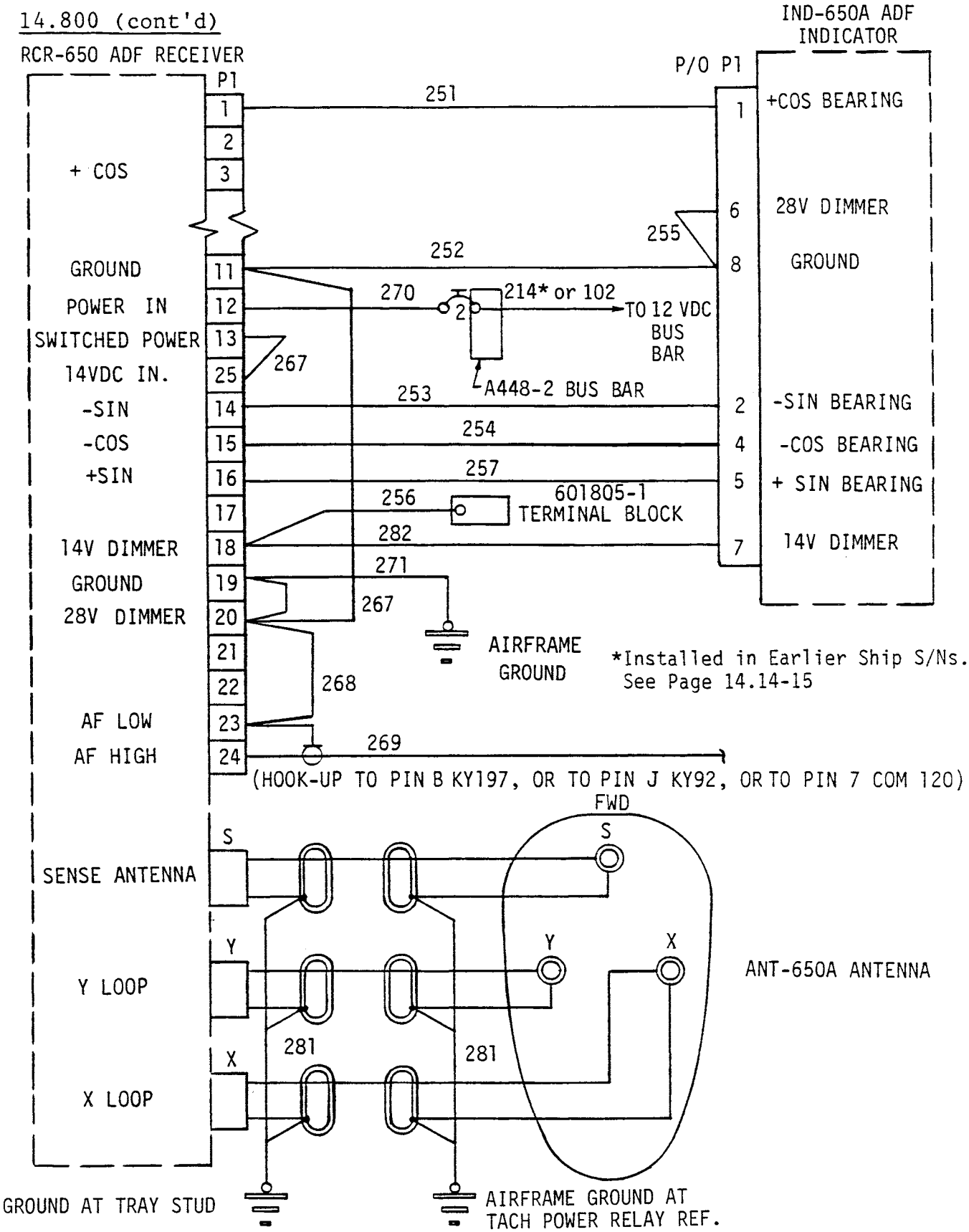

FIGURE 14-22 COLLINS ADF-650A SYSTEM

14.800 AVIONICS SCHEMATICS (cont'd)

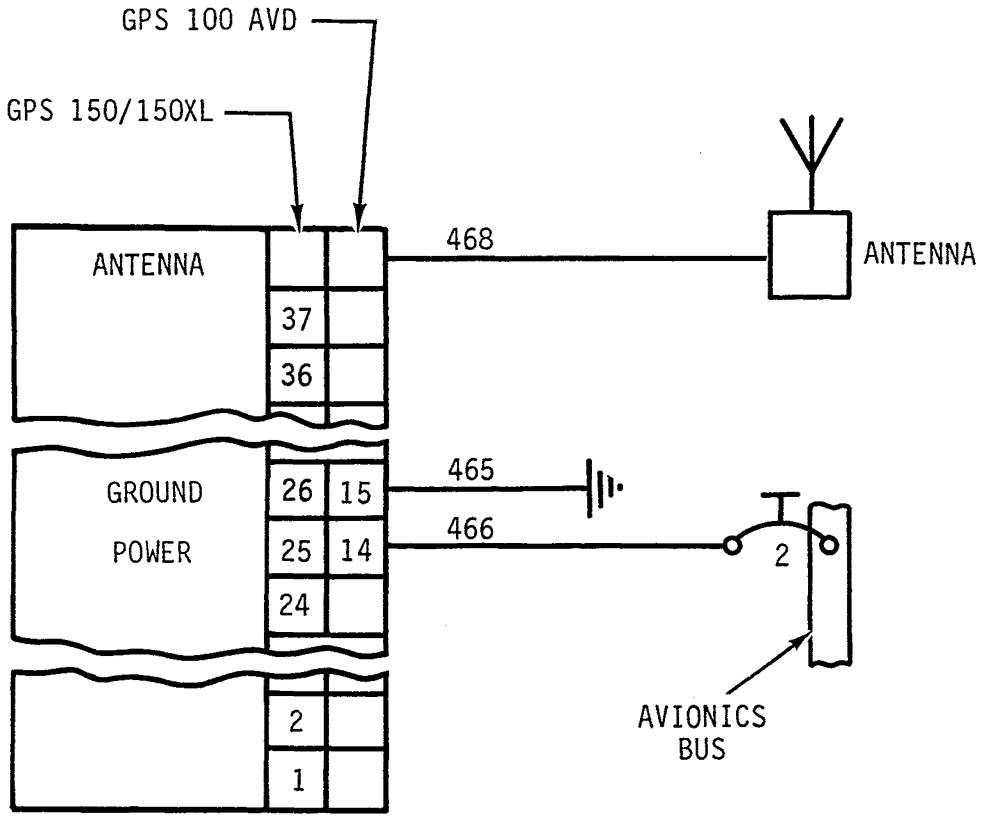

FIGURE 14-22A

GARMIN GPS 100, 150, and 150XL
SCHEMATIC

14.800 AVIONICS SCHEMATICS (cont'd)

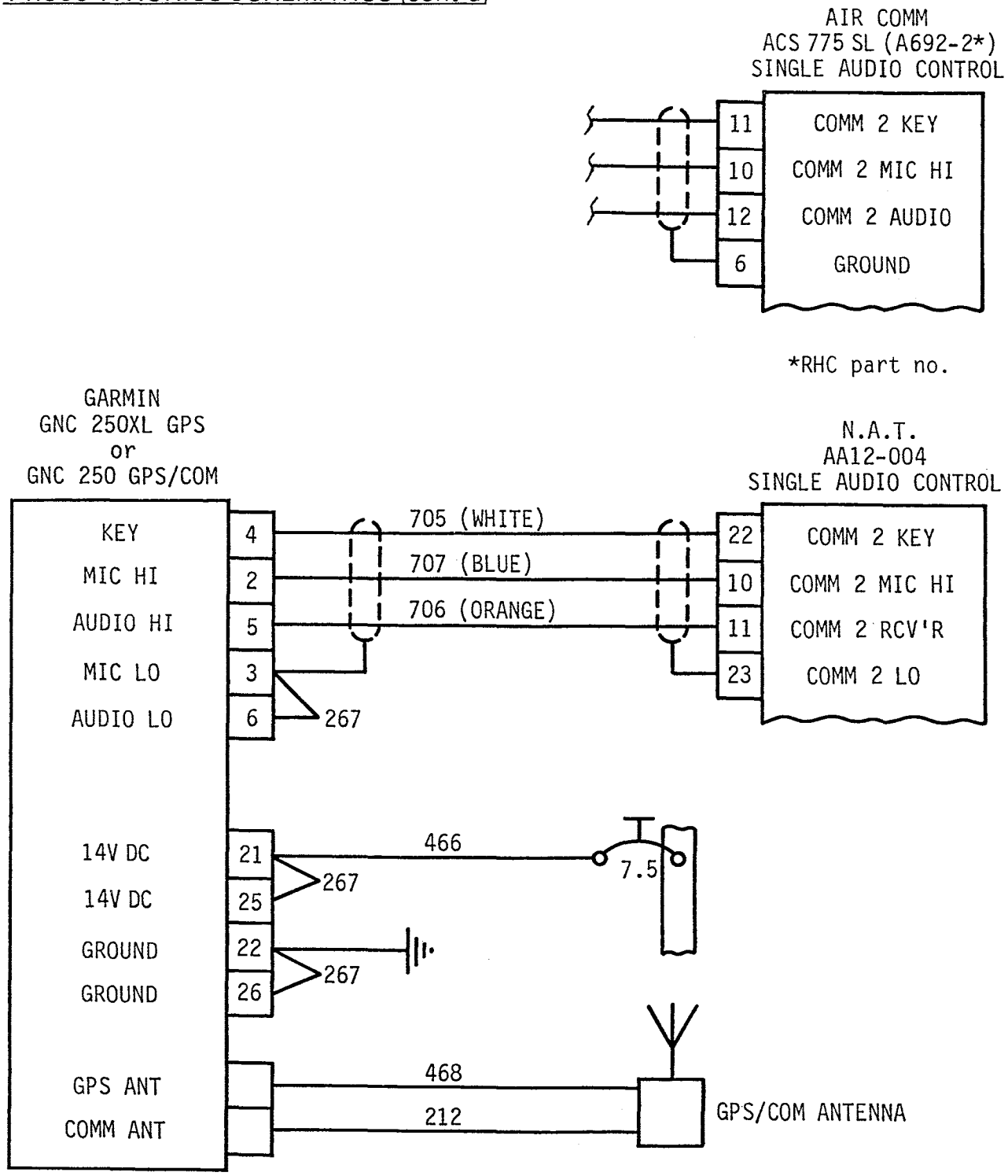

FIGURE 14-22B

GARMIN
GNC 250XL GPS and GNC 250 GPS/COM
SCHEMATIC

14.800 AVIONICS SCHEMATICS (cont'd)

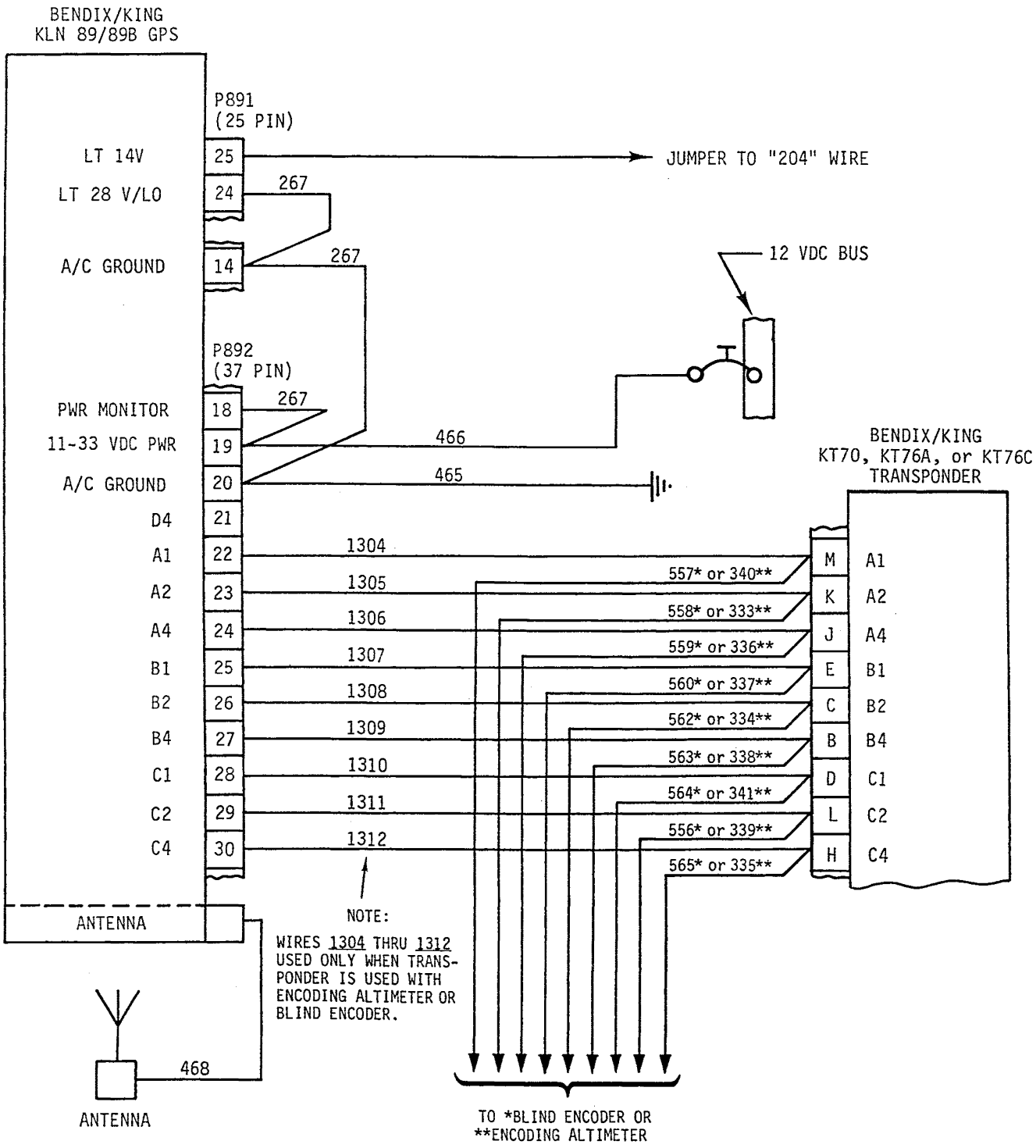

FIGURE 14-22C

BENDIX/KING KLN 89/89B GPS RECEIVER SCHEMATIC

14.800 AVIONICS SCHEMATICS (cont'd)

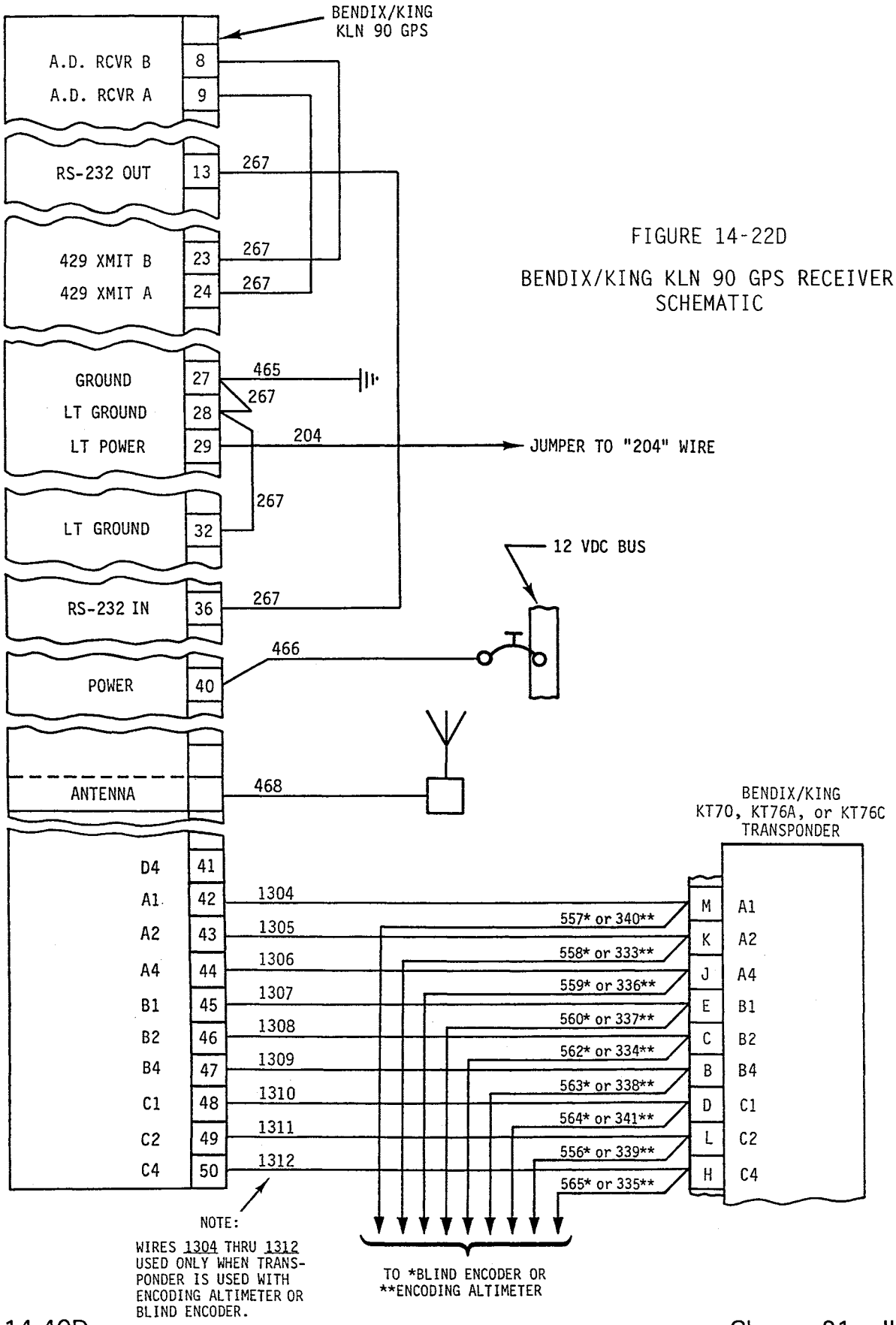

FIGURE 14-22D

BENDIX/KING KLN 90 GPS RECEIVER SCHEMATIC

14.900 UPPER CONSOLE HARNESS PLUGS (STANDARD & HP)

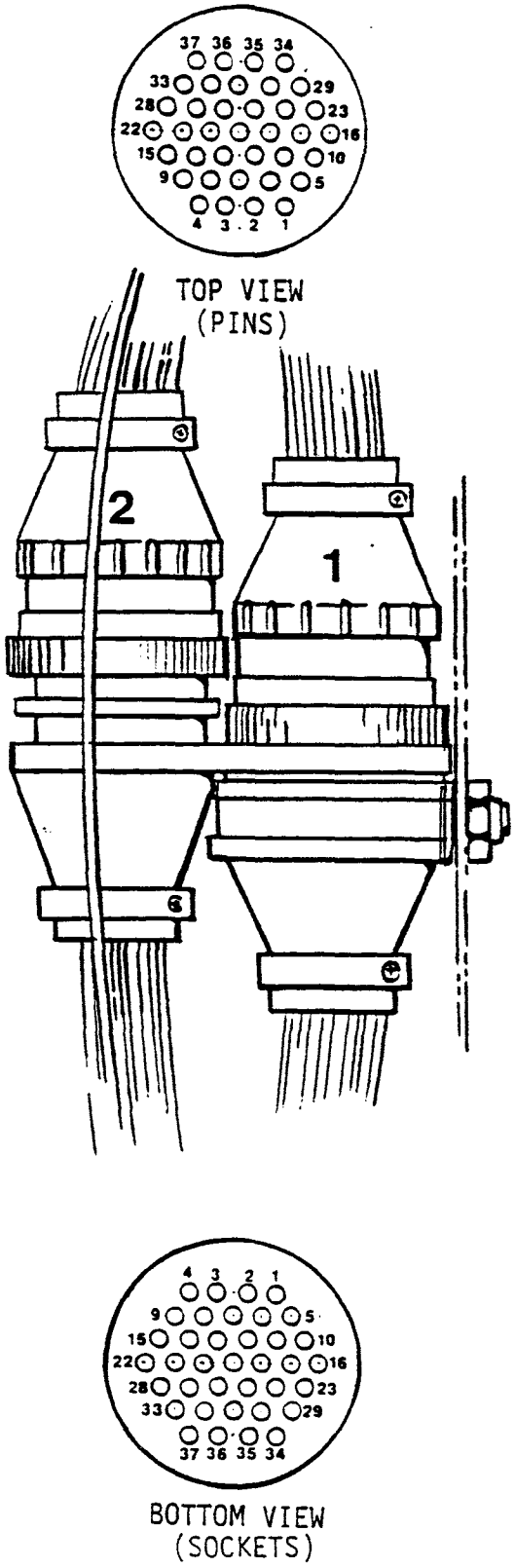

CONNECTOR 1	
PIN NO.	WIRE NO.
1	A059-2
2	A059-3
3	
4	A059-5
5	A059-6
6	A059-9
7	A059-10
8	A059-11
9	A059-12
10	A059-13
11	A059-15
12	A059-16
13	A059-17
14	A059-18
15	A059-19
16	A059-31
17	A059-34
18	A059-128
19	A059-129
20	A059-38
21	Spare
22	Spare
23	Spare
24	Spare
25	Spare
26	Spare
27	Spare
28	A059-52
29	A059
30	Spare
31	A059-58
32	A059-167
33	A059-65
34	A059-164
35	A059-67
36	A059-166
37	

CONNECTOR 2	
PIN NO.	WIRE NO.
1	Spare
2	A039-104
3	A039-105
4	A039-106
5	A039-107
6	Spare
7	A059-163
8	A052-127
9	A040-70
10	A040-71
11	A040-72
12	A040-74
13	A040-75
14	A040-76
15	A040-83
16	A040-81
17	A040-82
18	A040-80
19	A040-84
20	Spare
21	Spare
22	Spare
23	Spare
24	A053-89
25	*
26	A060-204
27	Spare
28	Spare
29	Spare
30	Spare
31	Spare
32	Spare
33	Spare
34	Spare
35	Spare
36	Spare
37	Or Avionics

* INSTALL DRAIN WIRE OF THREE-CONDUCTOR CABLE (WIRES -80,-81,-82) AT NOTED PIN.

FIGURE 14-23 UPPER CONSOLE HARNESS PLUGS

14.900 UPPER CONSOLE HARNESS PLUGS (ALPHA & SUBSEQUENT)

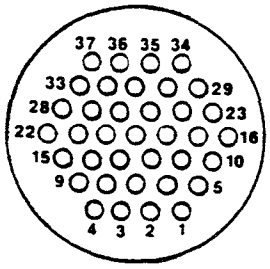

TOP VIEW
(PINS)

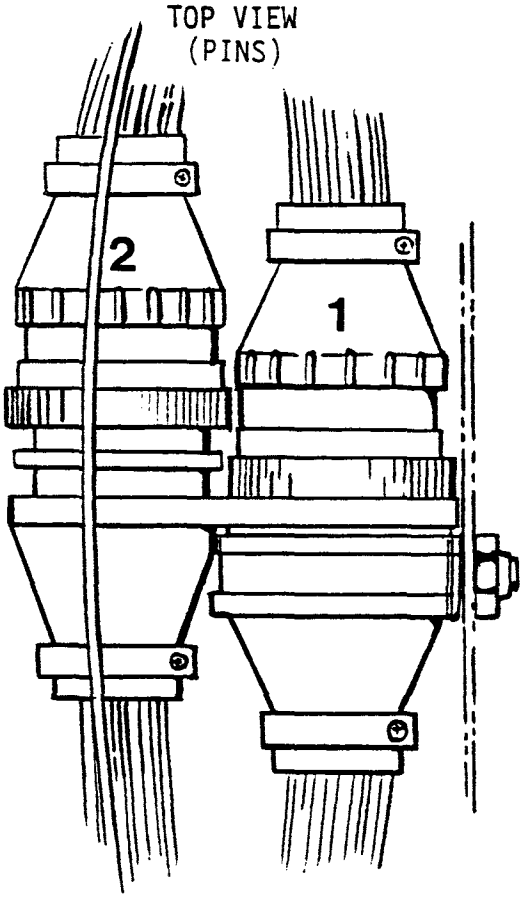

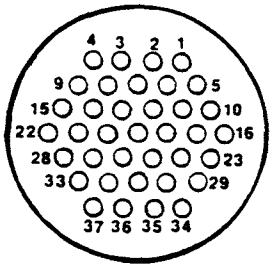

BOTTOM VIEW
(SOCKETS)

CONNECTOR 1	
PIN NO.	WIRE NO.
1	A059-2
2	A059-3
3	Spare
4	A059-5
5	A059-6
6	A059-9
7	A059-10
8	A059-11
9	A059-12
10	A059-13
11	A059-15
12	A059-16
13	A059-17
14	A059-18
15	A059-19
16	A059-31
17	A059-34
18	A059-128
19	A059-129
20	A059-38
21	Spare
22	B043-416
23	A059-513
24	Spare
25	Spare
26	Spare
27	Spare
28	A059-52
29	Spare
30	Spare
31	A059-58
32	Spare
33	A059-65
34	A059-164
35	Spare
36	A059-166
37	Spare

CONNECTOR 2	
PIN NO.	WIRE NO.
1	A059-199
2	A039-104
3	A039-105
4	A039-106
5	A039-107
6	A059-101
7	A059-163
8	A052-127
9	A040-70
10	A040-71
11	A040-72
12	A040-74
13	A040-75
14	A040-76
15	A040-83
16	A040-81
17	A040-82
18	A040-80
19	A040-84
20	Spare
21	Spare
22	Spare
23	Spare
24	Spare
25	*
26	A060-204
27	A059-28
28	A059-66
29	A059-67
30	A053-90
31	A053-91
32	A053-94
33	A053-95
34	Spare
35	A039-138
36	Spare
37	Spare

* INSTALL DRAIN WIRE OF THREE-CONDUCTOR CABLE (WIRES -80,-81,-82) AT NOTED PIN.

FIGURE 14-23A UPPER CONSOLE HARNESS PLUGS

14.1000 IFR TRAINER

14.1010 IFR Trainer Component Loads

Continuously-Powered Equipment:

Power & Accessories	Part Number	Qty.	Max. Amps Each	Total Amps
Battery relay	70-906	1	.75	.75
Alternator control	VR418-1	1	4.0	4.0
Master radio relay	W389CX-2	1	.13	.13
Night Lights				
Anti-Collision light	A470	1	3.2	3.2
Position lights	A7512/1777	3	2.2	6.6
Instrument lights	330	9	.08	.72
Instruments				
Engine gage cluster	A617/B144	1	.50/.60	.50/.60
Dual tachometer	A792-1	1	.10	.10
Hourmeter	773	1	.03	.03
Carb Air temp	A604	1	.13	.13
Ammeter shunt	MLS-60-100	1	.50	.50
Digital OAT gage	310-2	1	.13	.13
Miscellaneous				
Heater blower	A643-1	1	7.5	7.5
			TOTAL =	24.29

Complete Avionics Panel for Instrument Trainer

COM/NAV Receiver	KX165	1	.70	.70
NAV Receiver	NAV121	1	.87	.87
Transponder	KT76A	1	1.80	1.80
ADF	KR87	1	1.24	1.24
Horizon ref ind	AIM500	1	1.80	1.80
Marker beacon	KR22	1	.50	.50
Turn coordinator	303700	1	.50	.50
Encoding altimeter	KE127	1	.12	.12
HSI	KI525A	1	.23	.23
Gyro	KG102A	1	3.0	3.0
			TOTAL =	10.76

14.1010 IFR Trainer Component Loads (cont'd)

Intermittently-Powered Equipment:

Starting Accessories	Part Number	Qty.	Max Amps Each	Total Amps
Starter relay	SAZ4201E	1	4.5	4.5
Starting vibrator	10-176487-121	1	2.5	2.5
Starter motor	MZ4224	1	150	150
Drive System				
Belt tension actuator	5A505-3	1	1.2	1.2
Lights				
Warning lights	330	8	.08	.64
Landing lights	4509	2	7.7	15.4
Miscellaneous				
Map light	A-1425A-2-12	1	.58	*.58
Landing light relay	MB-1380	1	.20	.20
Low RPM horn & relay	16004042-W101PCX	1	.35	.35
			TOTAL =	*16.18

Instrument Trainer Avionics				
COM Transmitter	KX165	1	*6.8	*6.8

14.1020 IFR Trainer Console Access

Pull circuit breakers on all gyro instruments and allow 5 minutes for gyro run down to prevent gyro damage.

See R22 operator manual for caging instructions upon power application.

Remove (6) screws holding faceplate to console and carefully pull faceplate and instruments forward.

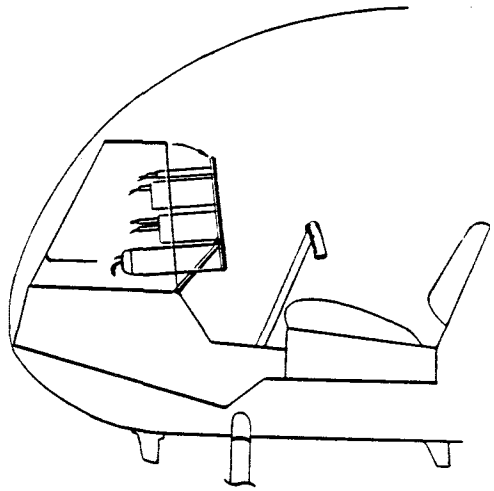

With cyclic full aft, instrument faceplate will now rotate to a horizontal position for access to back of instruments.

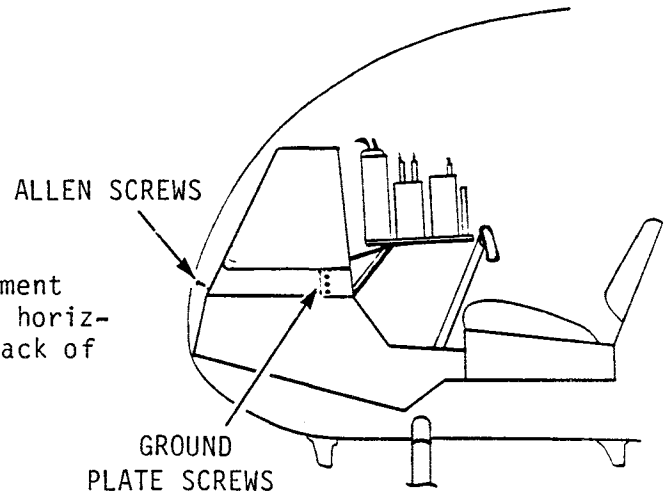

If console shell needs to be removed for access, place support under faceplate as shown.

Remove three ground plate screws from each side of console.

Remove two allen head screws in nose of console. Remove two screws from each side of console.

Disconnect wiring from horn, horn relay, and low RPM unit attached to console shell.

Carefully remove console shell.

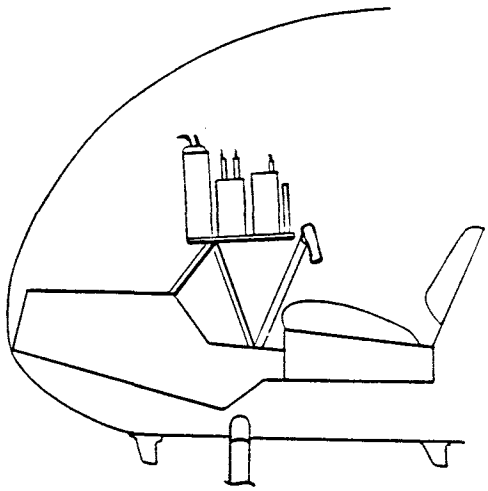

14.1030 IFR Trainer Component Location

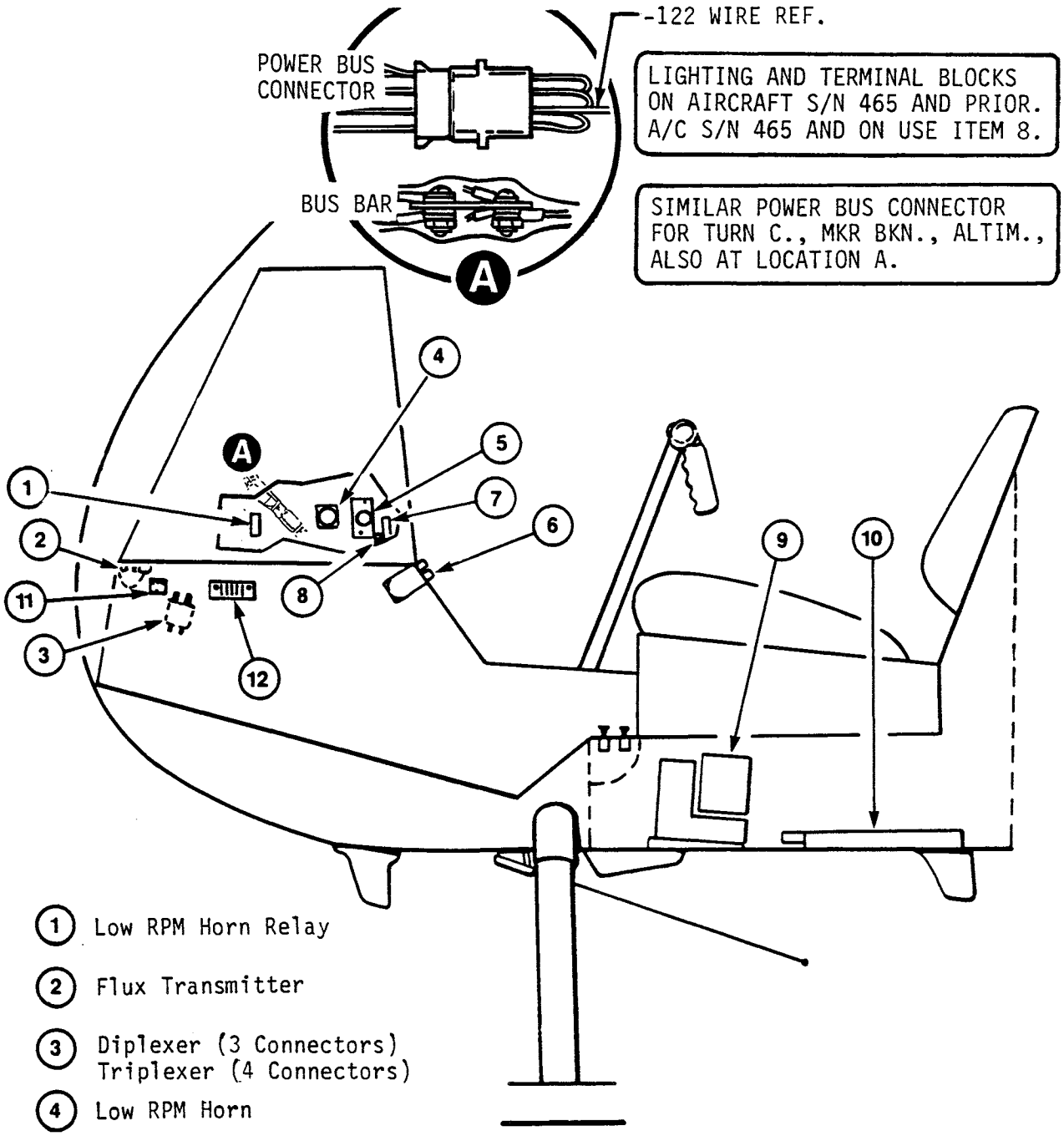

1. Low RPM Horn Relay
2. Flux Transmitter
3. Diplexer (3 Connectors)
   Triplexer (4 Connectors)
4. Low RPM Horn
5. Low Rpm Unit
6. Slave Control
7. Ground Panel
8. Terminal Block, Lighting (Used on A/C after S/N 465)
9. Directional Gyro-Remote (Left Baggage Compartment)
10. DME-Remote (Left Baggage Compartment)
11. Terminal Block, Gyro Ground Wires
12. Terminal Block, Audio

FIGURE 14-24 IFR TRAINER COMPONENT LOCATION

14.1040 IFR Trainer Avionics Schematics

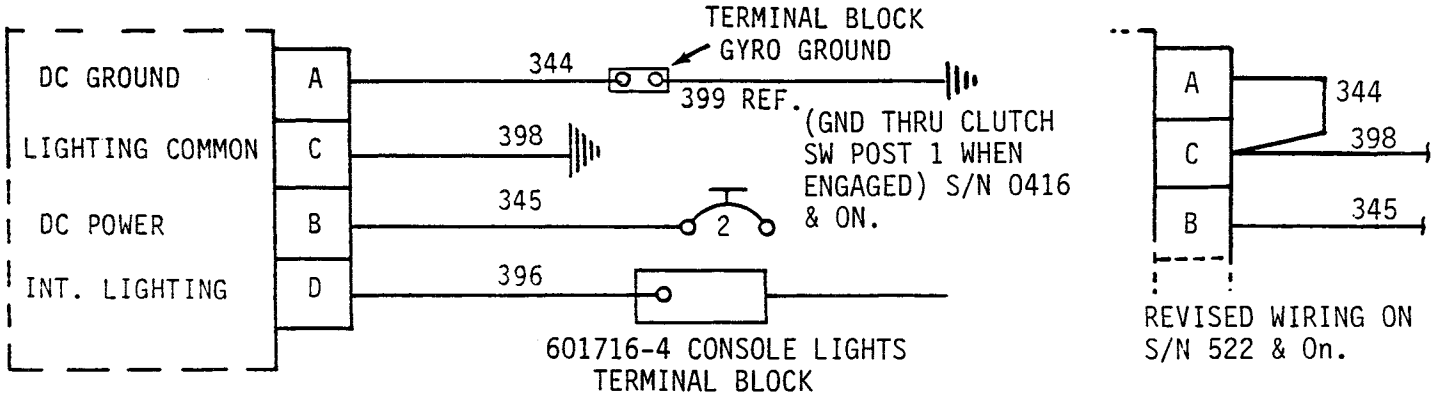

AIM 500 HORIZONTAL REFERENCE INDICATOR

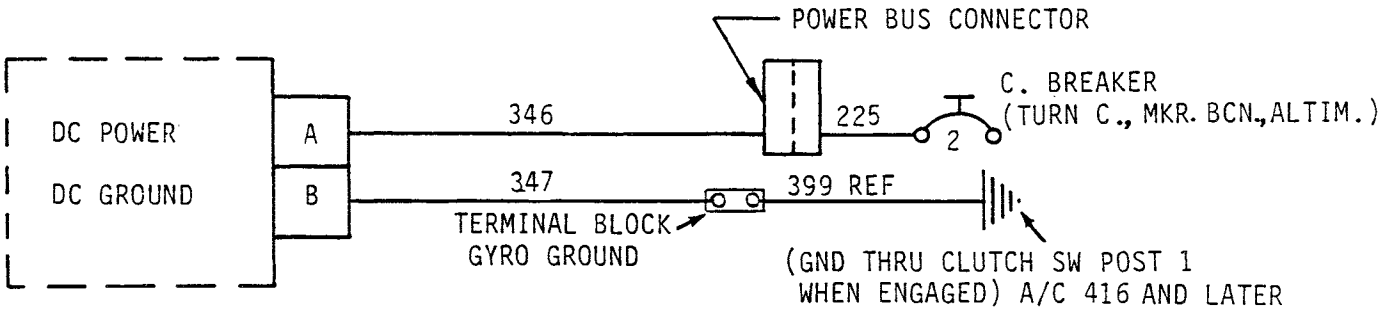

ASTRONAUTICS 303700 TURN COORDINATOR

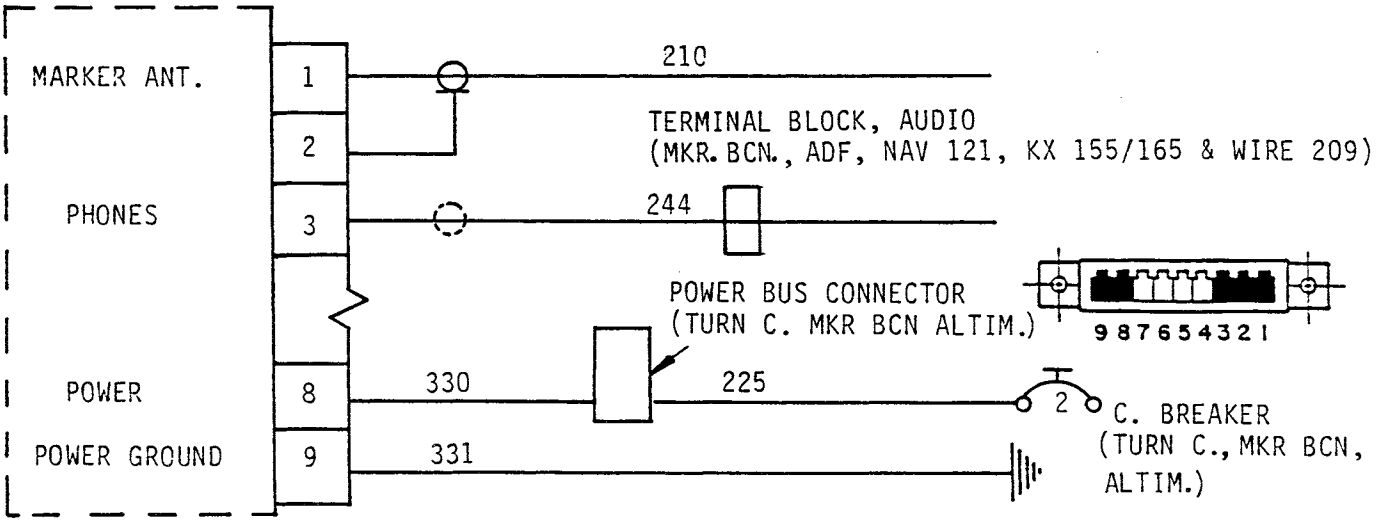

KING KR 22 MARKER BEACON

14.1040 (cont'd)

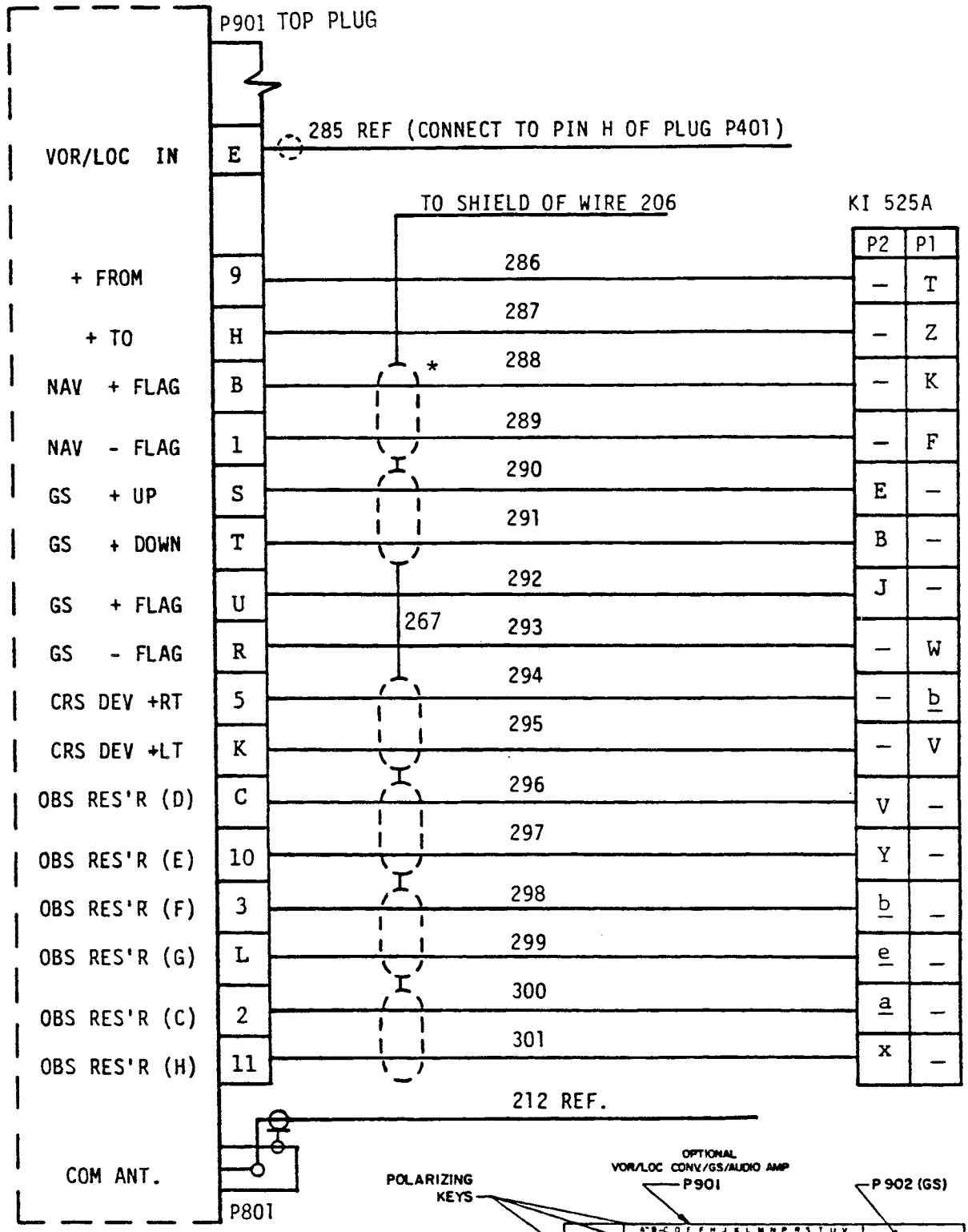

*This Shield Installed on Earlier Ship S/Ns.

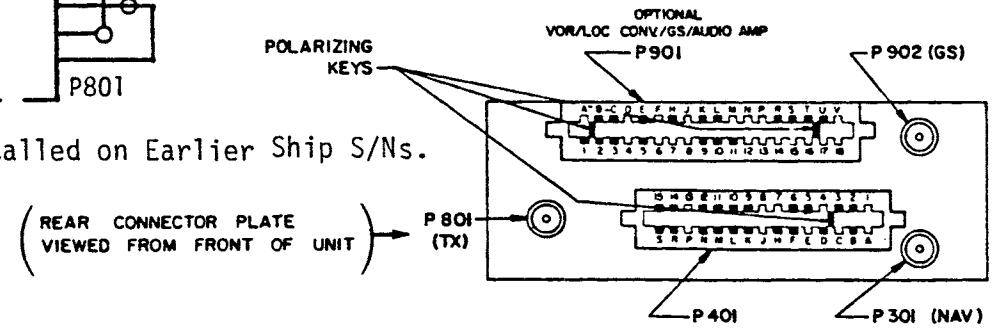

 FIGURE 14-26 KING KX 165 VHF NAV/COM TRANSCEIVER (TOP PLUG)

14.1040 (cont'd)

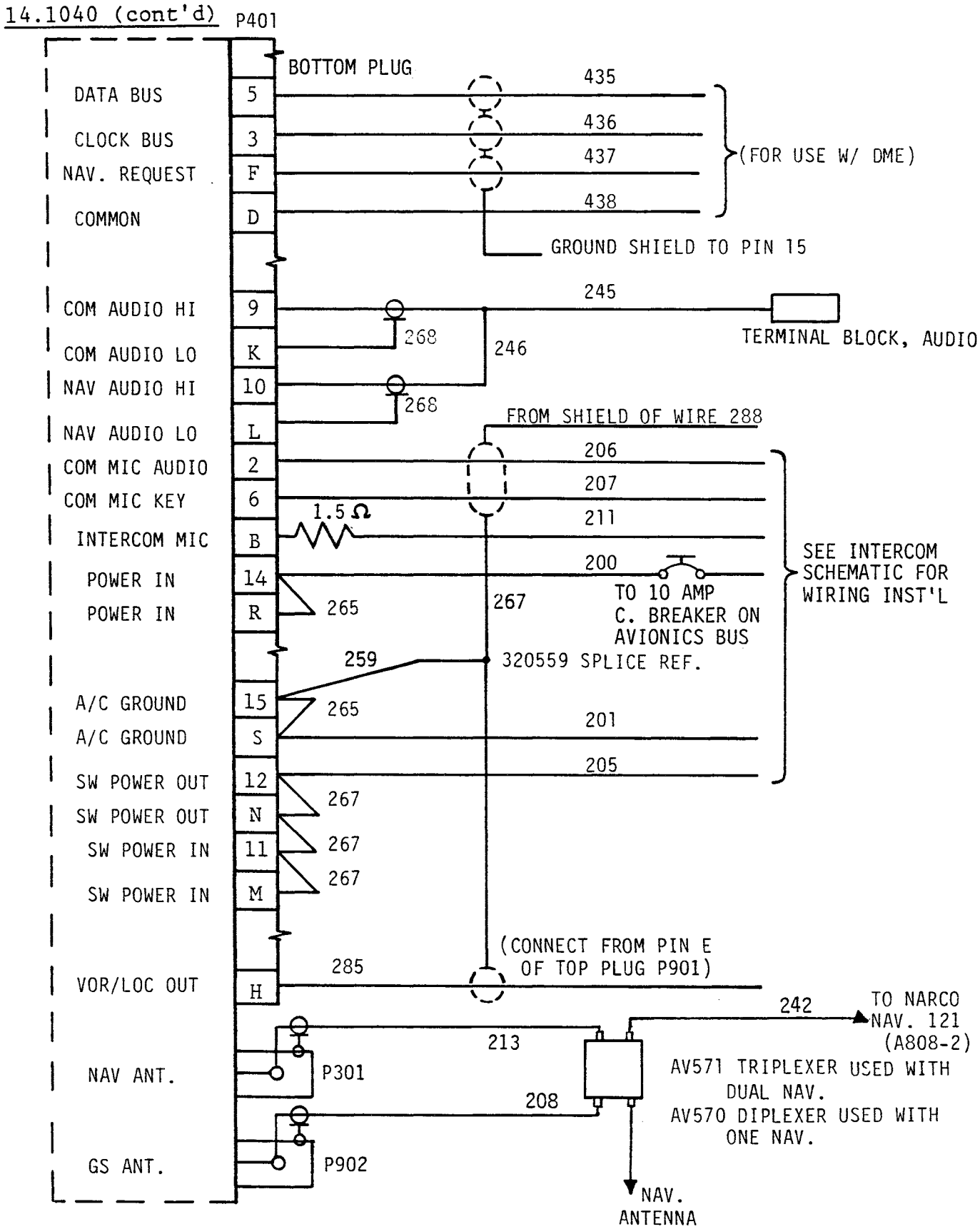

14.1040 (cont'd)

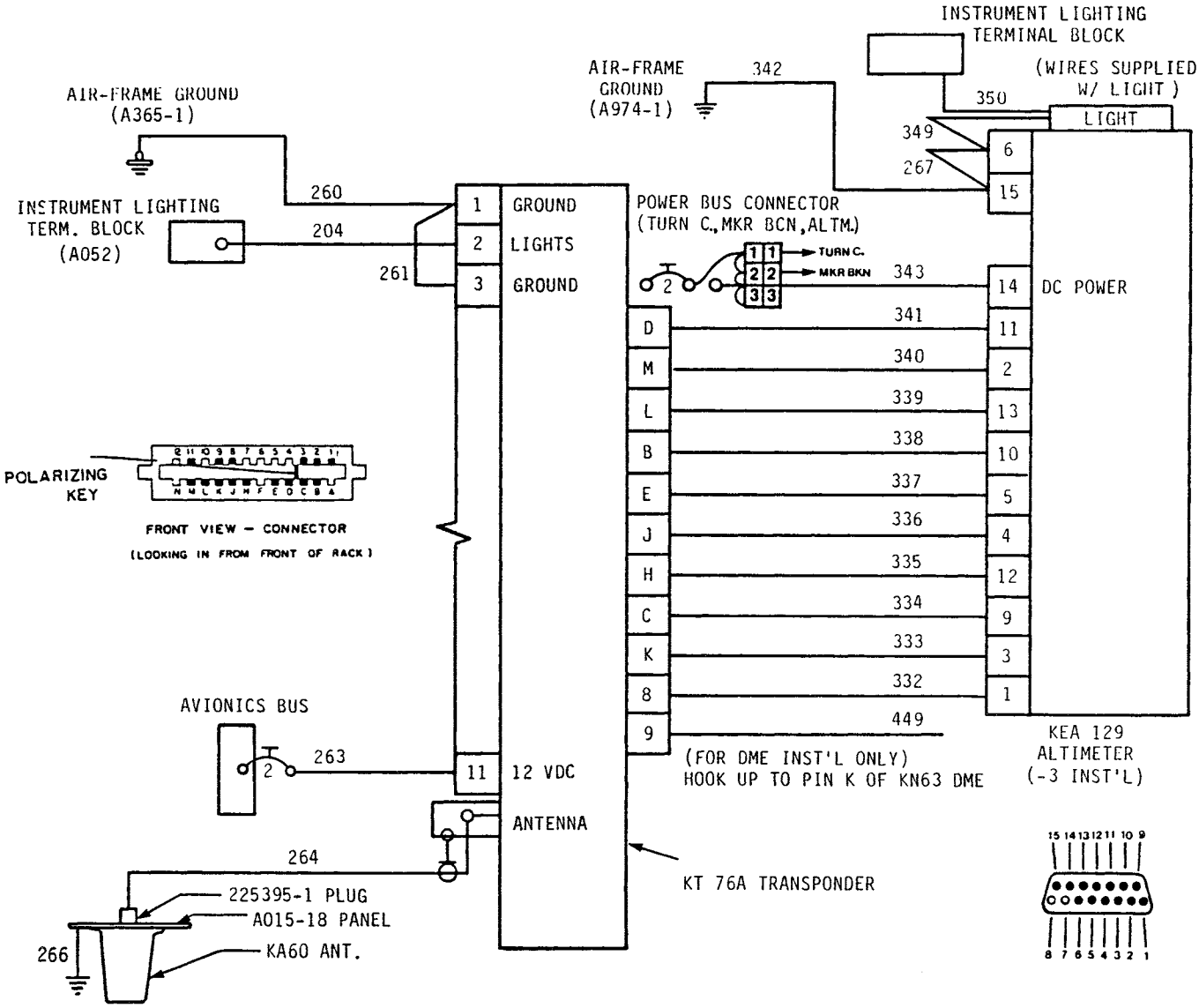

FIGURE 14-27 KING KT76A TRANSPONDER
WITH
KING KEA 129 ENCODING ALTIMETER

14.1040 (cont'd)

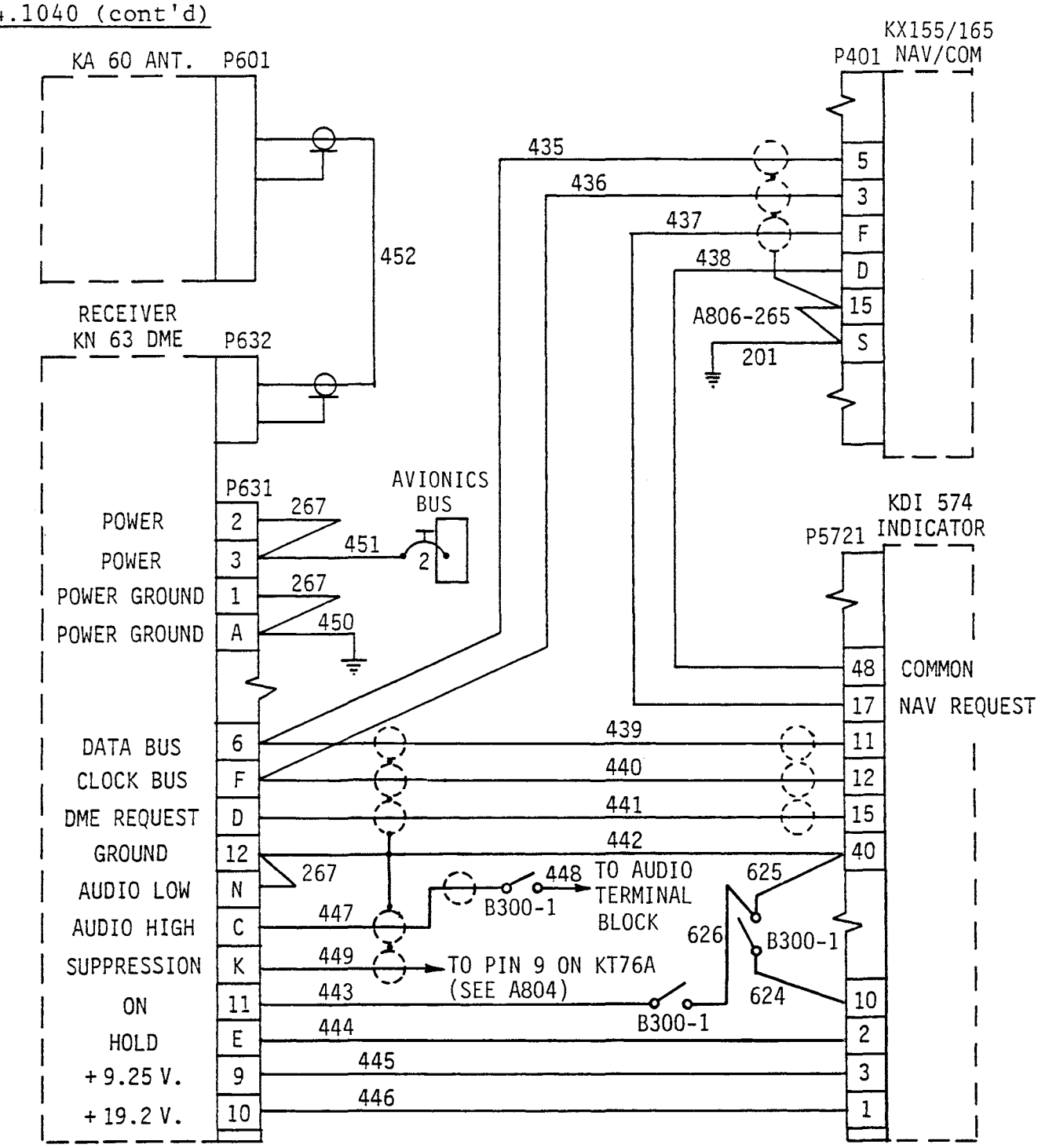

FIGURE 14-28 KING KN63 DME

KDI 574 CONNECTOR P5741/ J5741 PIN 5 KEYED PIN VIEW OF MALE OR SOLDER CUP VIEW OF FEMALE CONNECTOR.

14.1040 (cont'd)

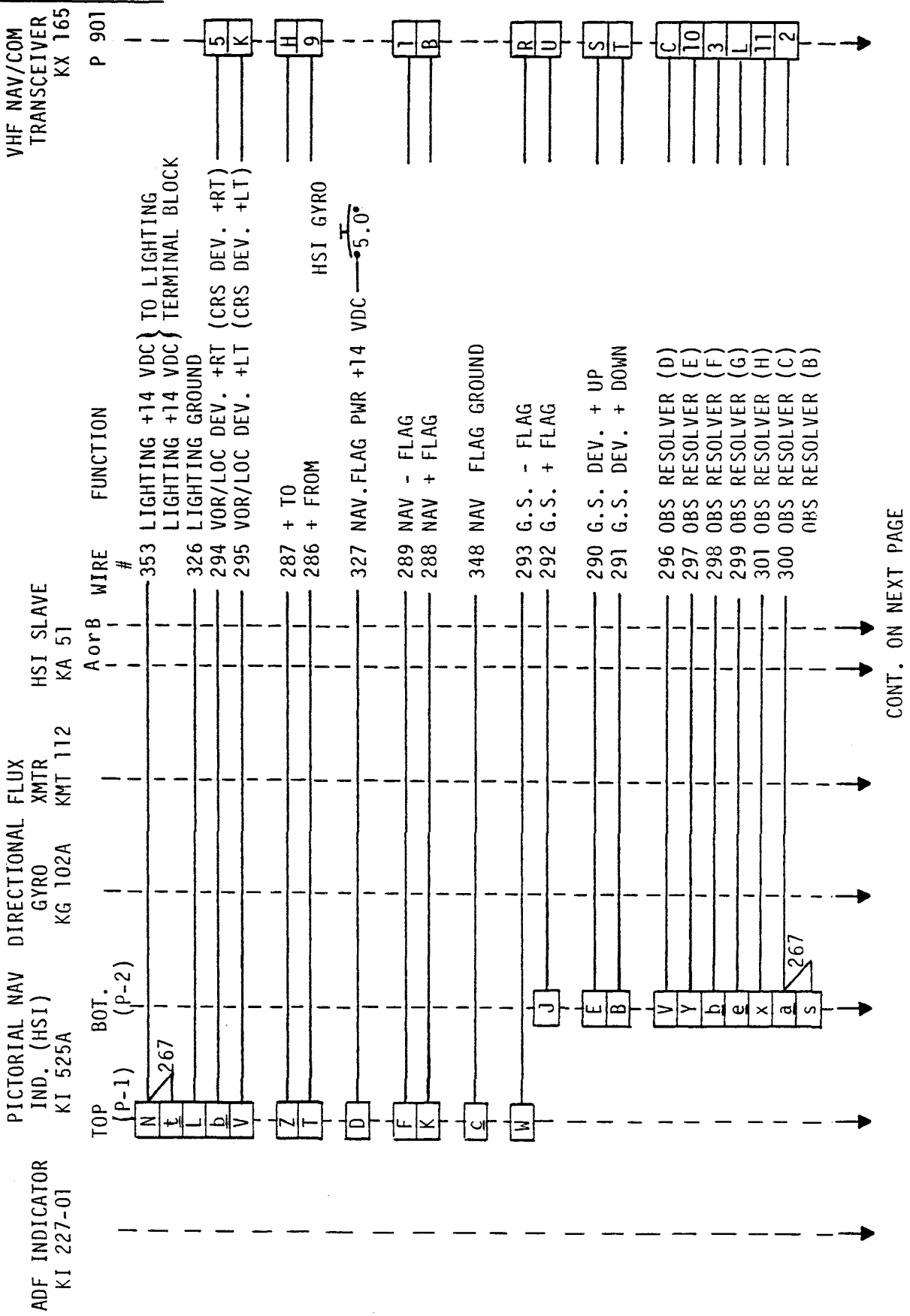

 FIGURE 14-29A KING KCS 55A PICTORAL NAV SYSTEM

14.1040 (cont'd)

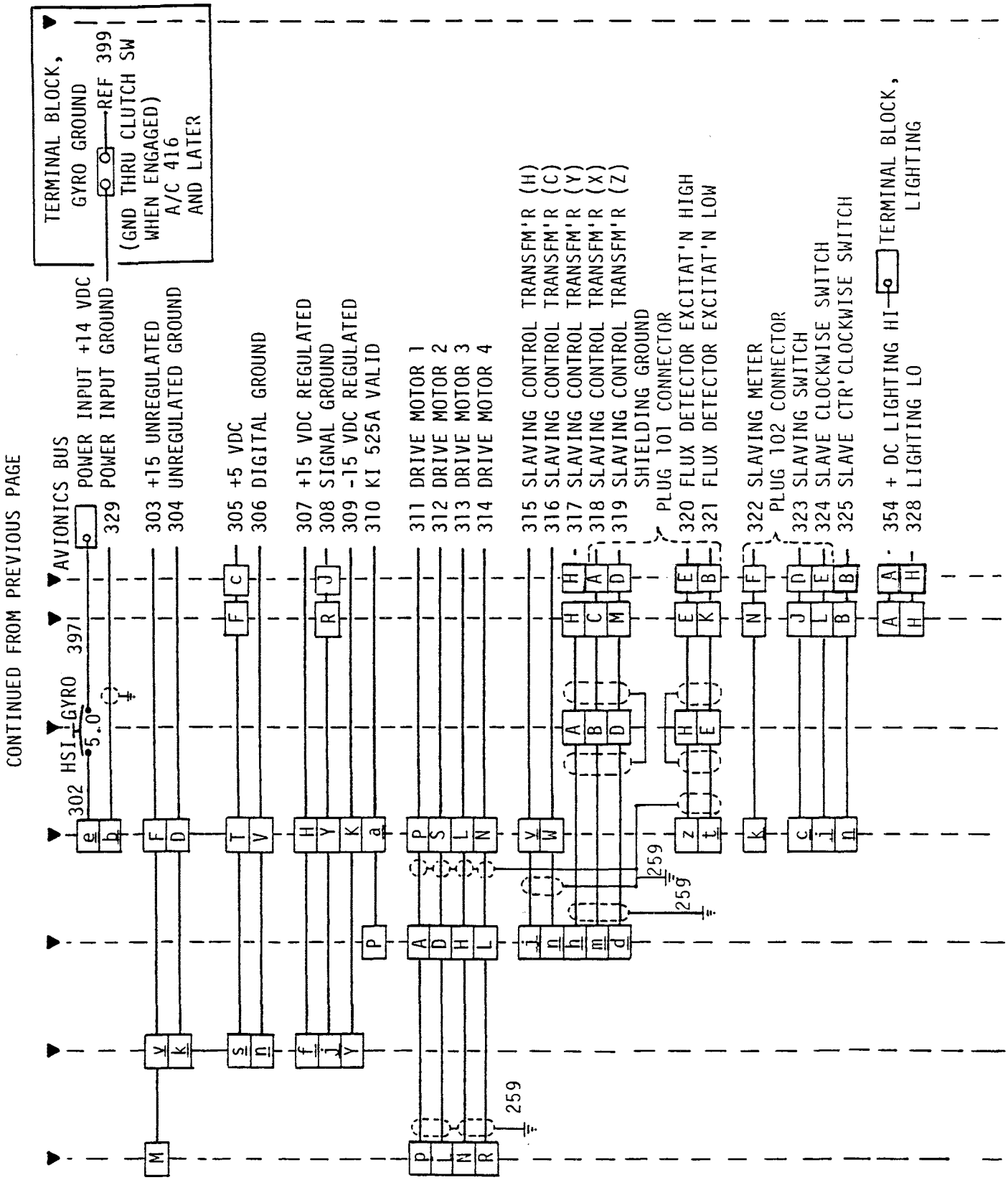

14.1040 (cont'd)

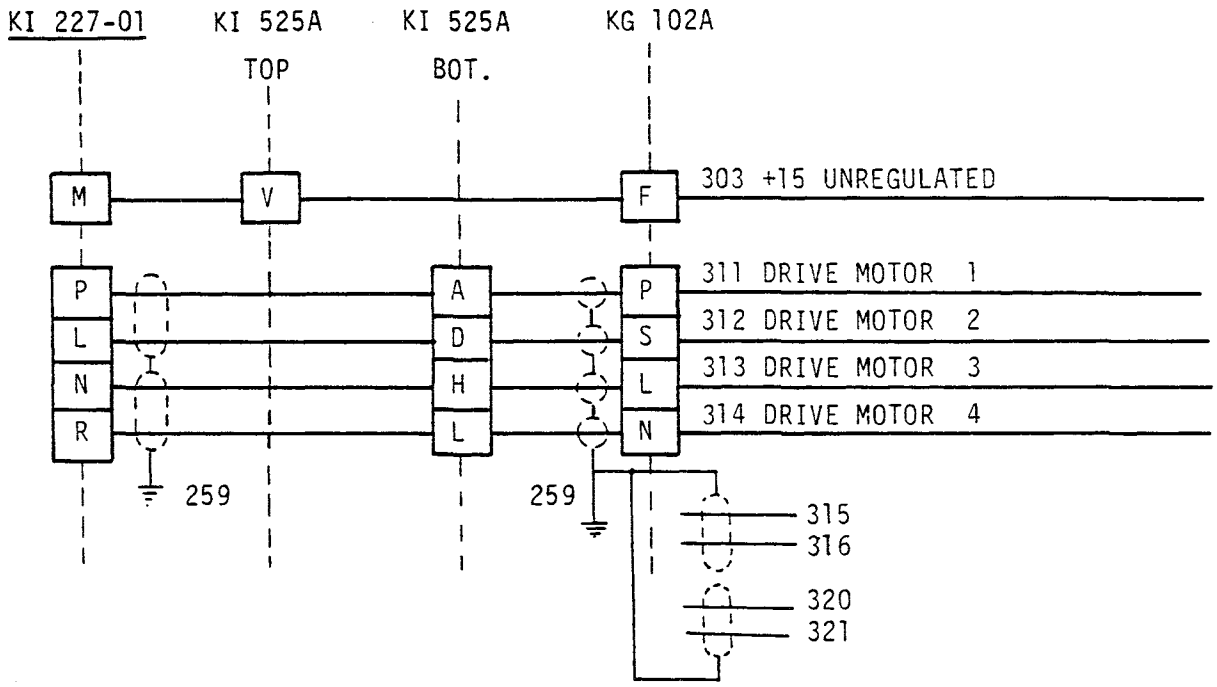

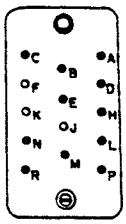

CONNECTOR VIEWED FROM REAR OF UNIT

FIGURE 14-30 KING KI 227-01 ADF INDICATOR

14.1040 (cont'd)

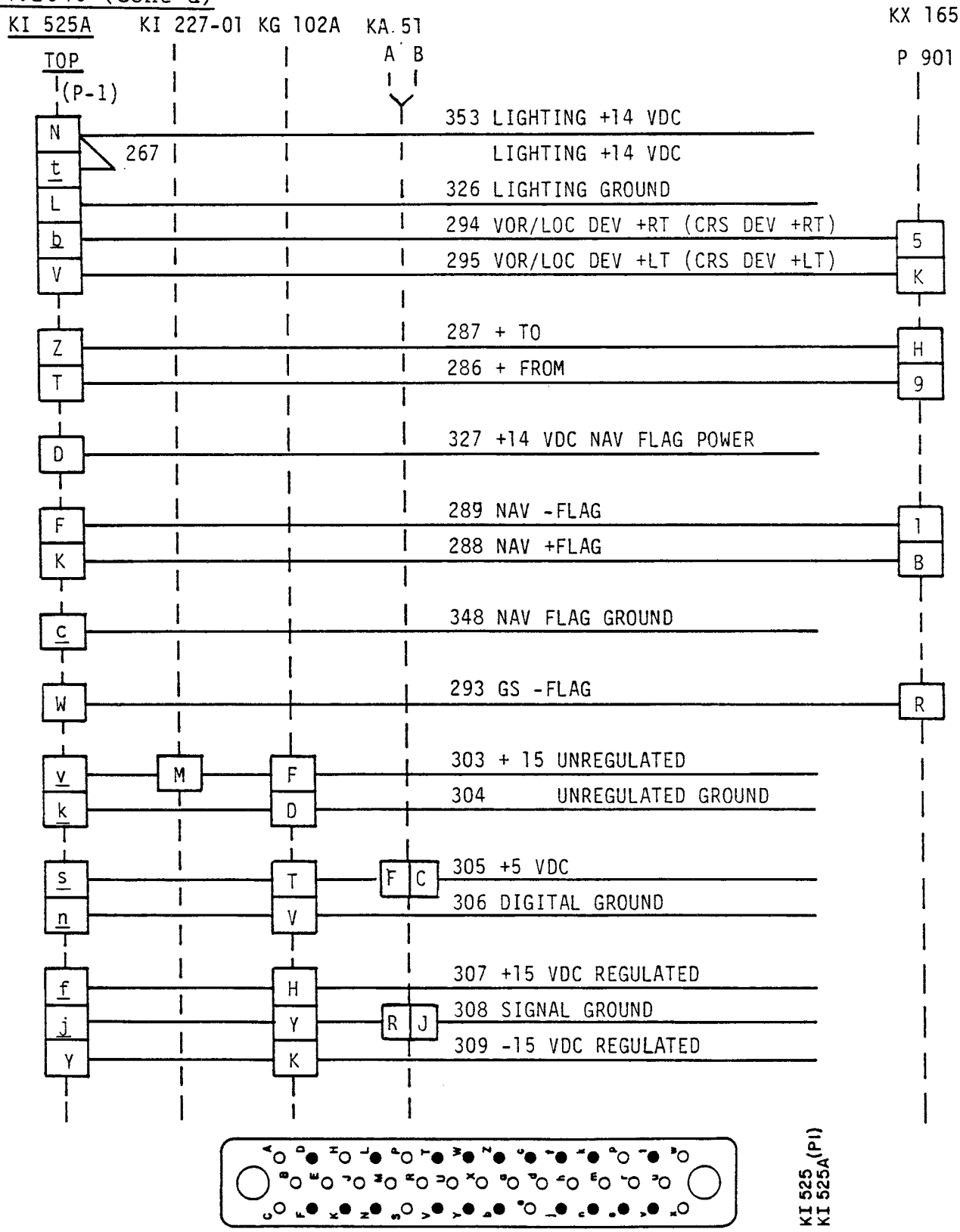

FIGURE 14-31A KI 525A PICTORAL NAV INDICATOR (TOP PLUG)

14.1040 (cont'd)

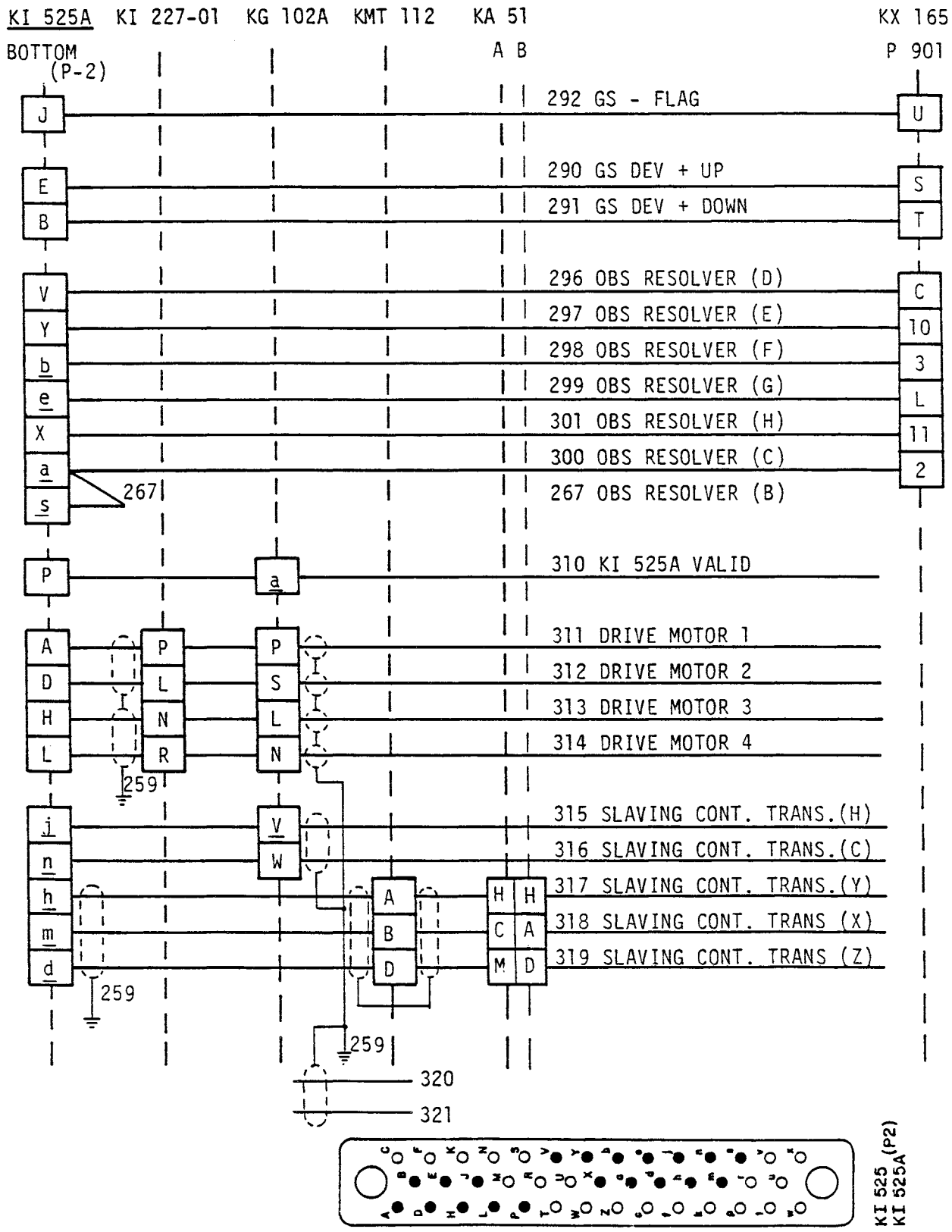

FIGURE 14-31B KI 525A PICTORAL NAV INDICATOR (BOTTOM PLUG)

14.1040 (cont'd)

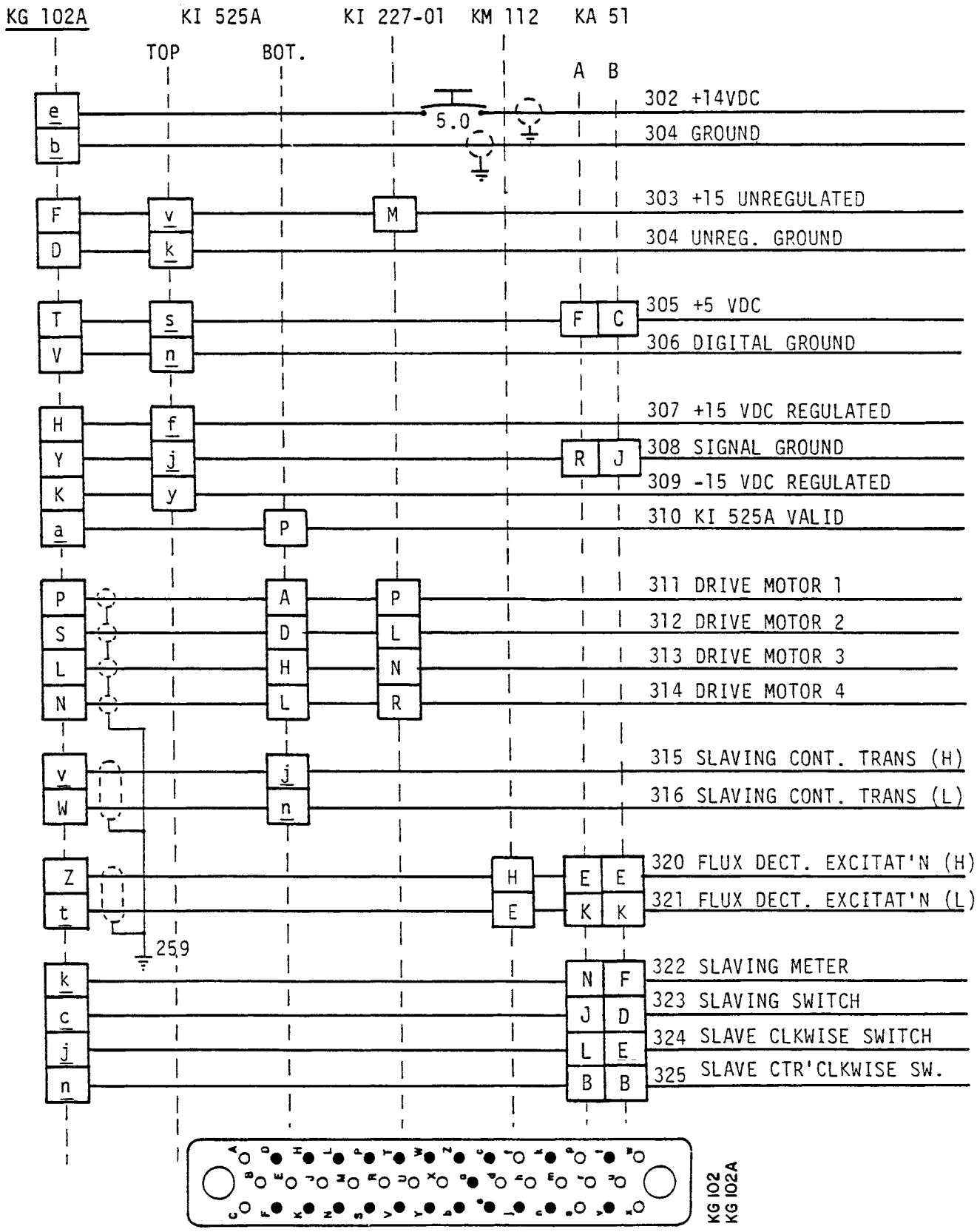

14.1040 (cont'd)

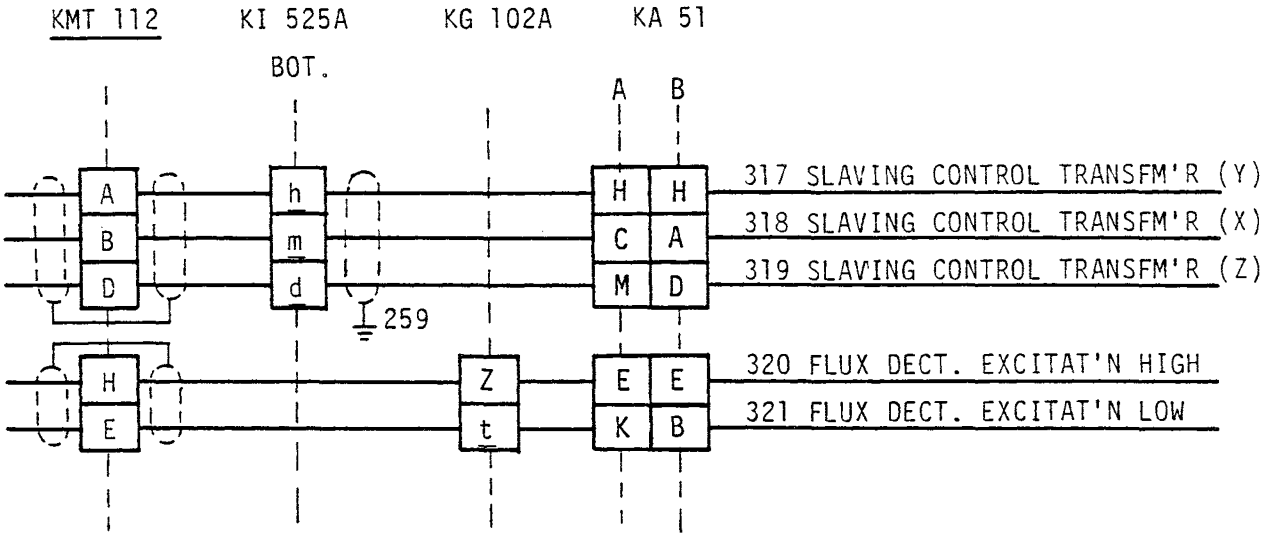

KMT 112

FIGURE 14-33 KING KMT 112 FLUX TRANSMITTER

14.1040 (cont'd)

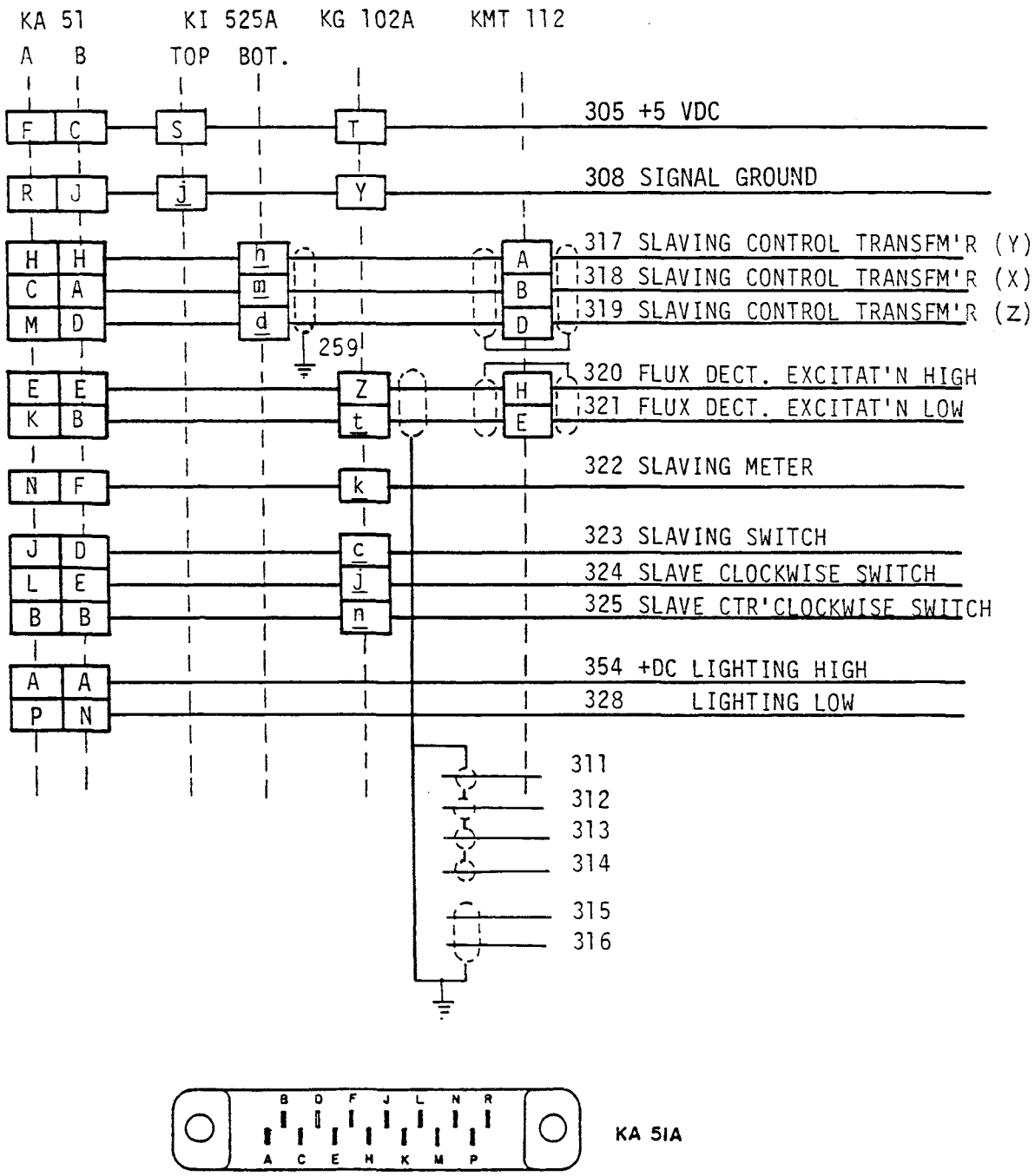

FIGURE 14-34 KING KA 51 (A & B) SLAVING ACCESSORY

14.1100 R22 MARINER

14.1110 R22 Mariner Avionics Schematics

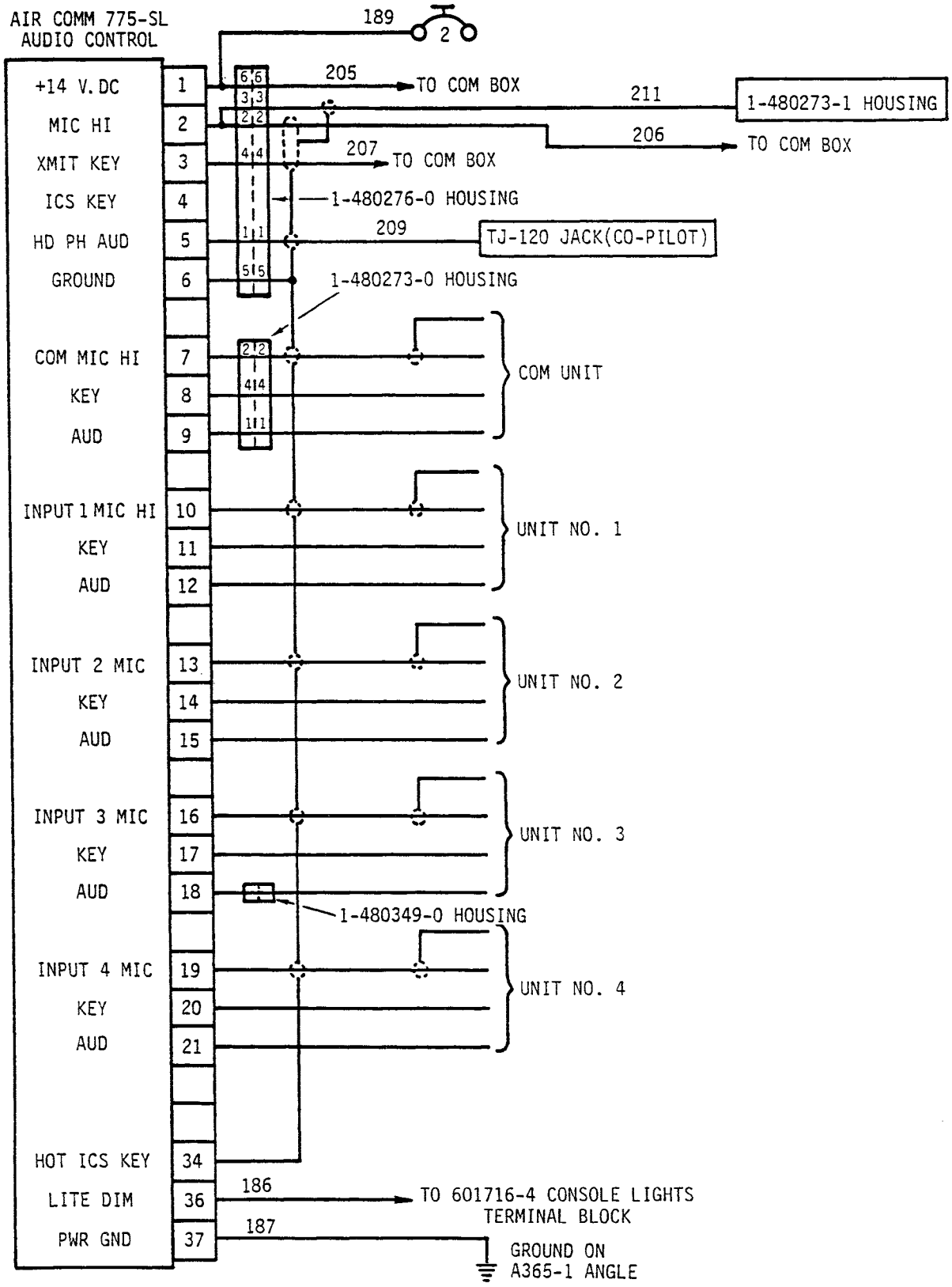

FIGURE 14-35 AIR COMM 775-SL AUDIO CONTROL

14.1110 (cont'd)

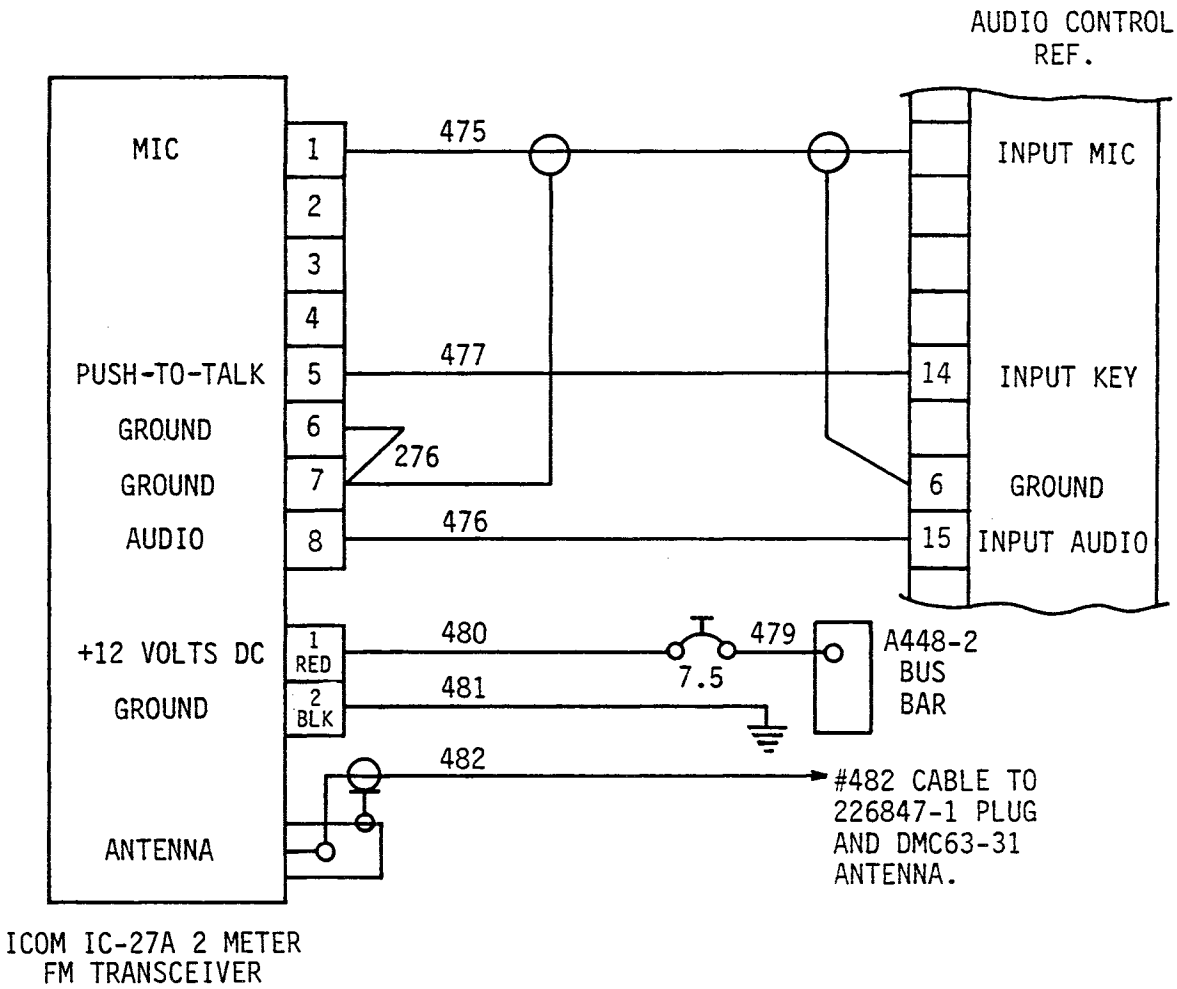

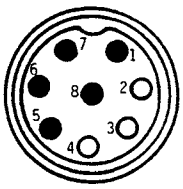

(LOOKING
TOWARD
AIRCRAFT)

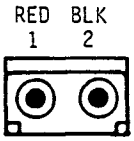

AUDIO/MIC
CONNECTOR

POWER
CONNECTOR

FIGURE 14-36 ICOM IC-27A 2-METER FM TRANSCEIVER

14.1110 (cont'd)

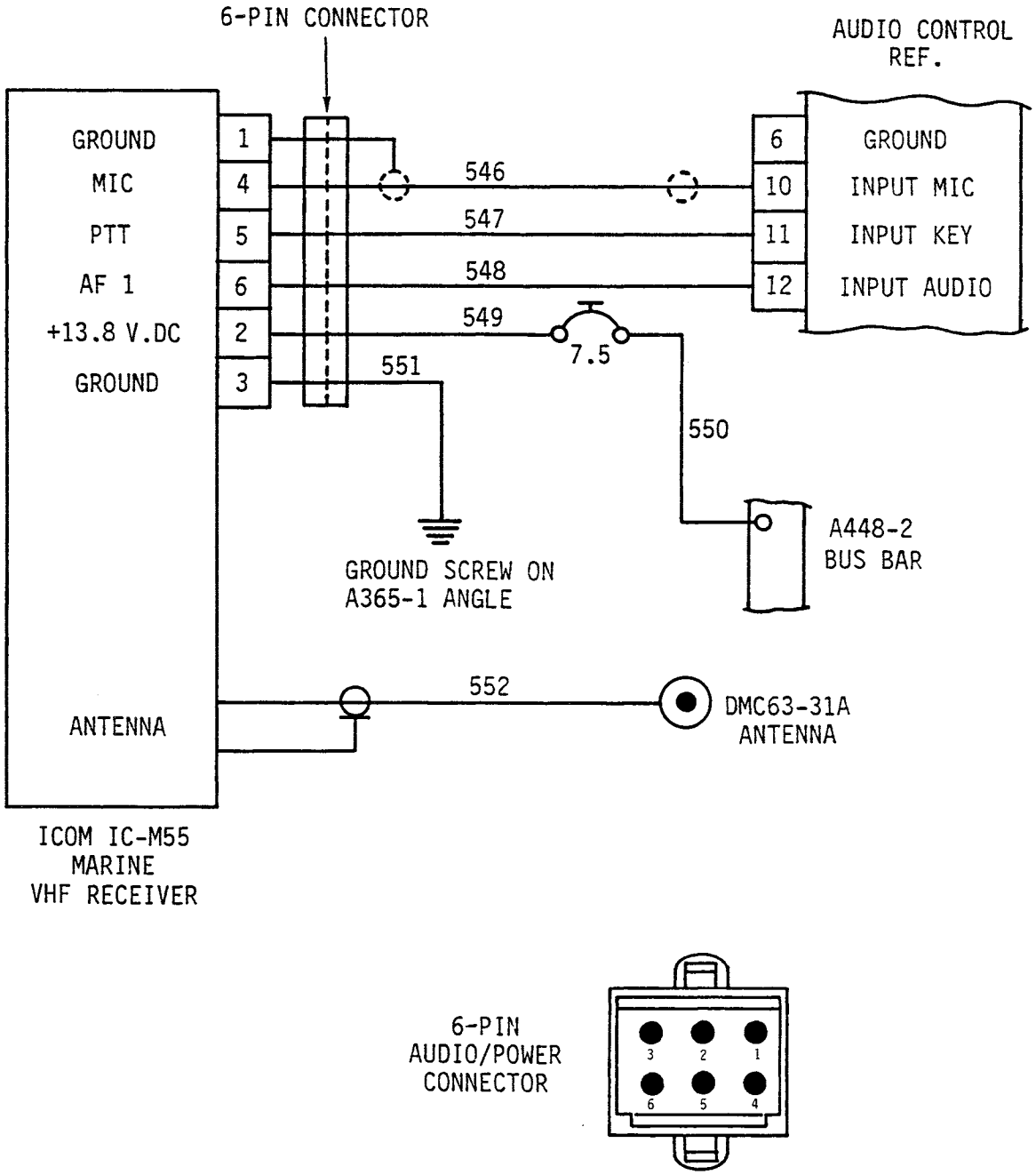

FIGURE 14-37 ICOM IC M55 MARINE VHF RECEIVER

14.1110 (cont'd)

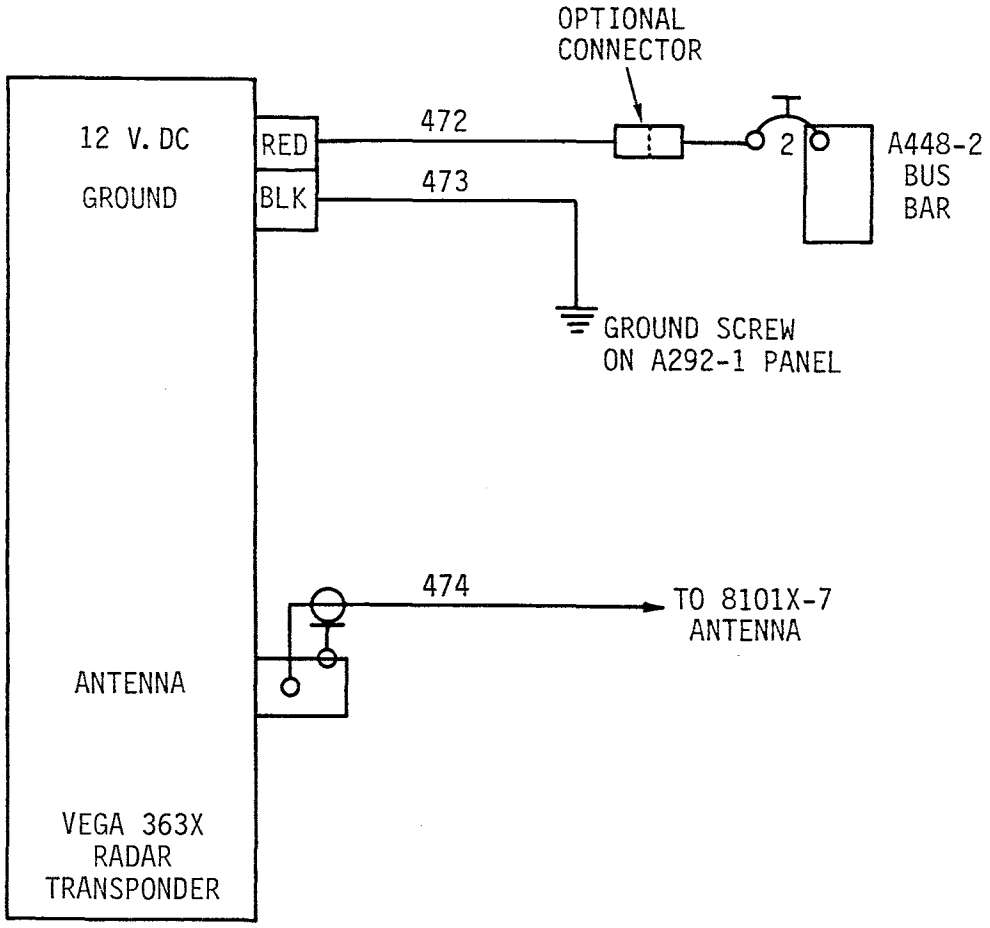

FIGURE 14-38 VEGA 363X RADAR TRANSPONDER

This page intentionally left blank.

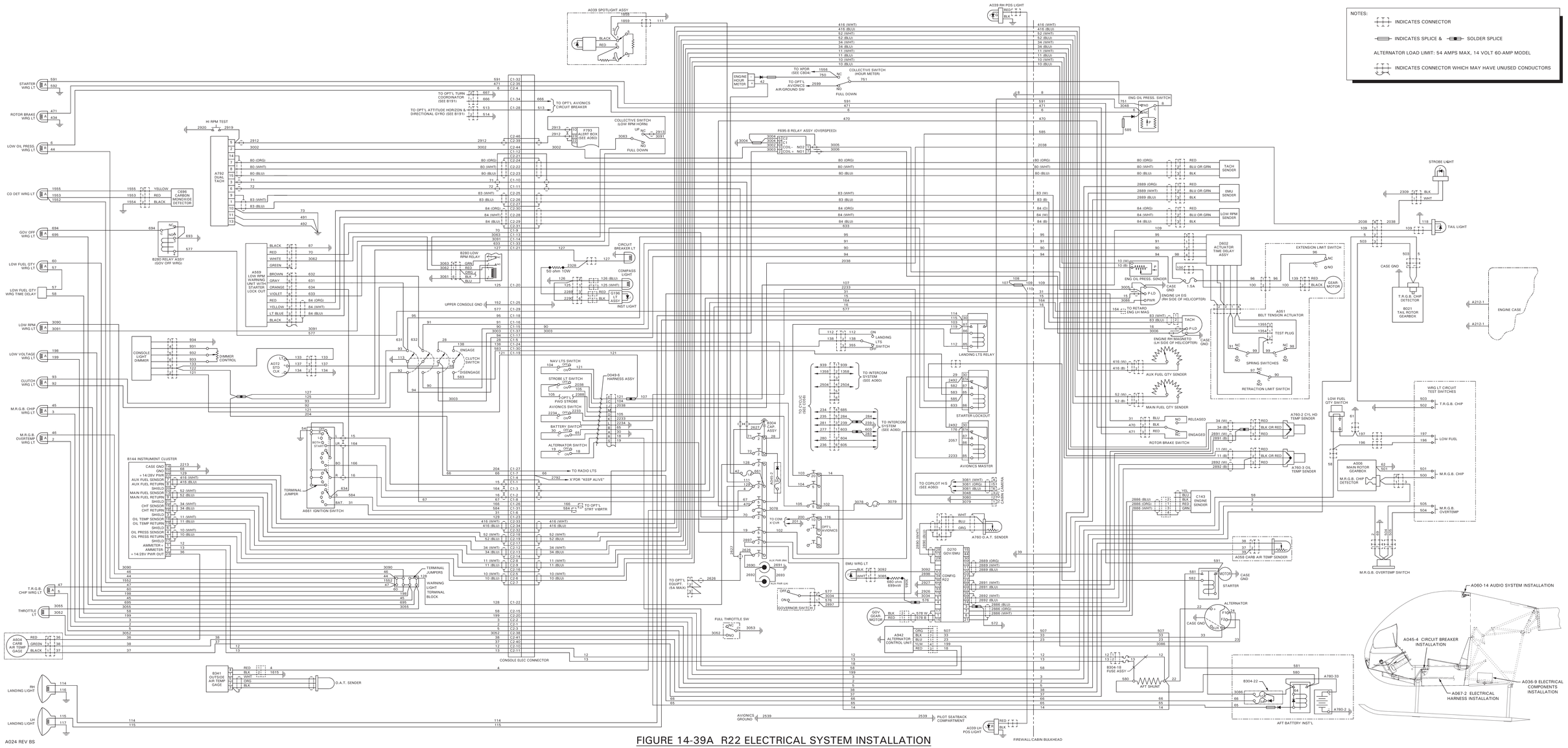

FIGURE 14-39A R22 ELECTRICAL SYSTEM INSTALLATION
(A024 Revision BS shown)

Intentionally Blank

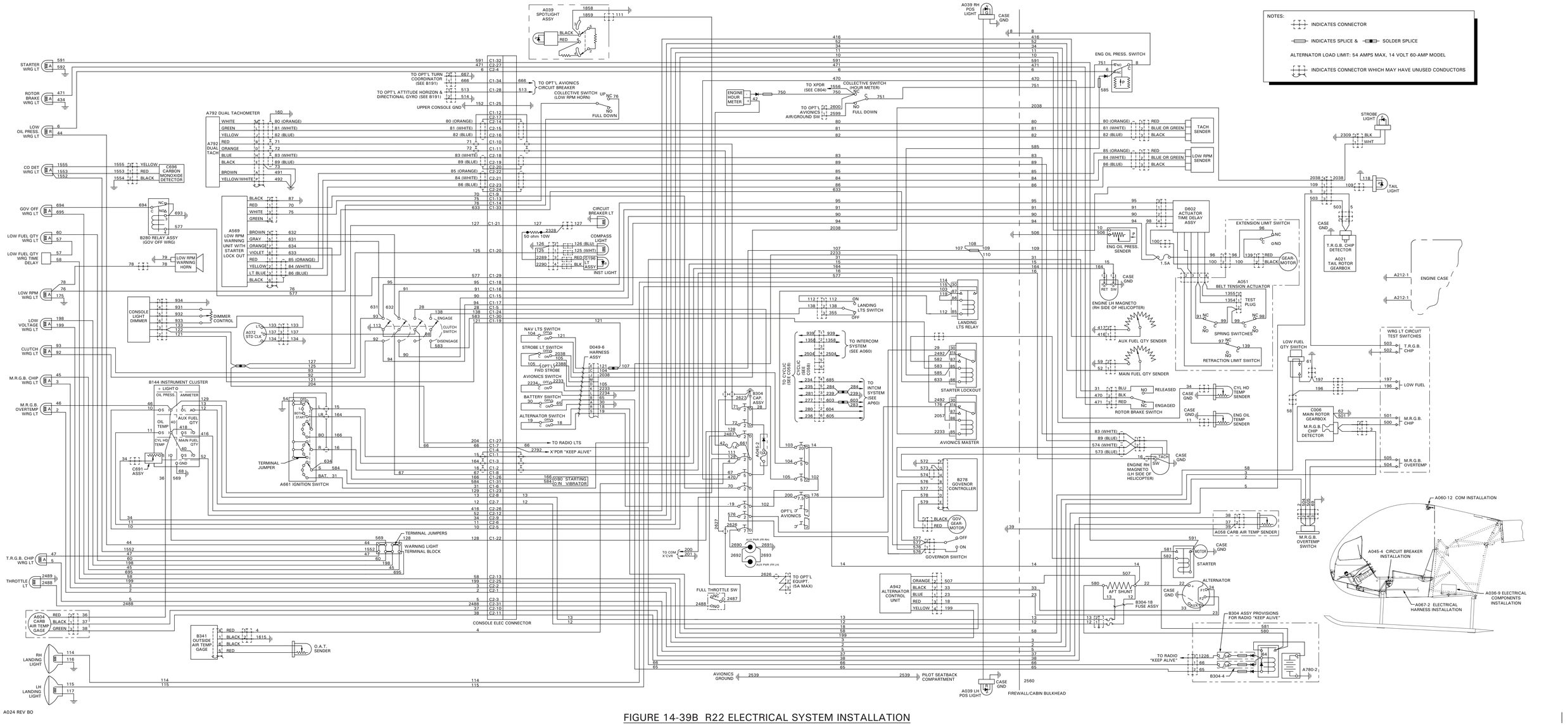

FIGURE 14-39B R22 ELECTRICAL SYSTEM INSTALLATION
(A024 Revision BO shown)

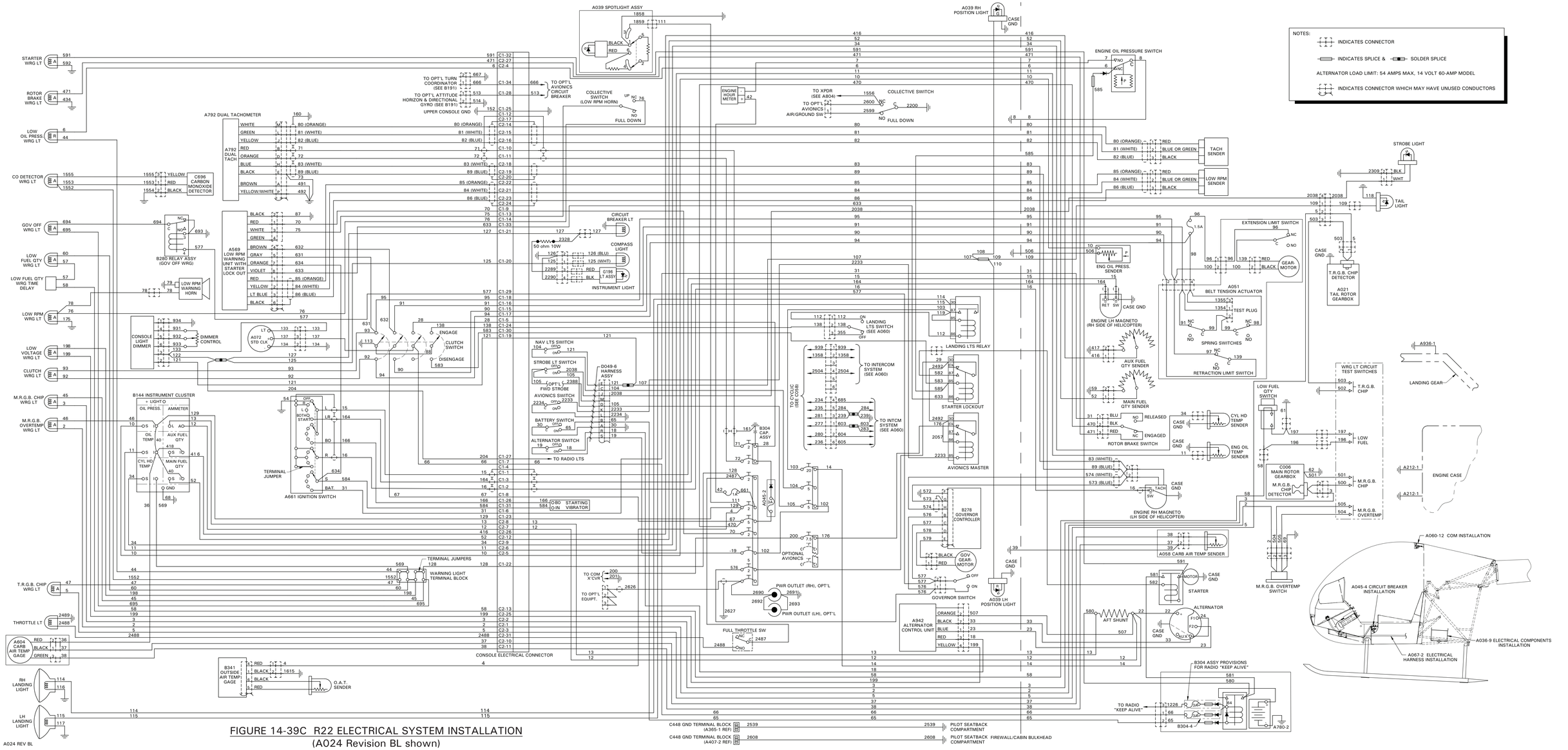

FIGURE 14-39C R22 ELECTRICAL SYSTEM INSTALLATION
(A024 Revision BL shown)

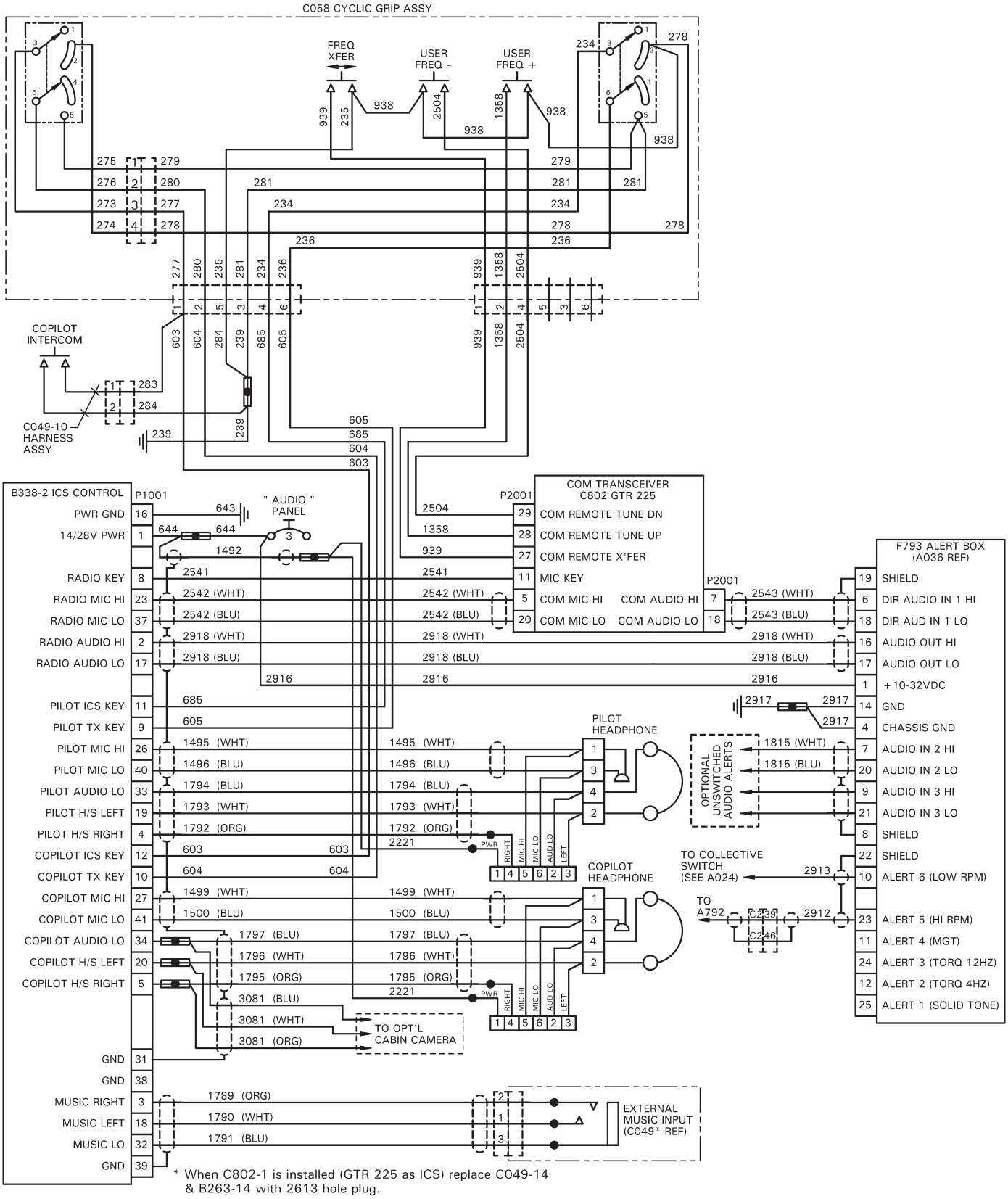

A060 REV AQ

FIGURE 14-40 A060-14 AUDIO SYSTEM INSTALLATION

Intentionally Blank

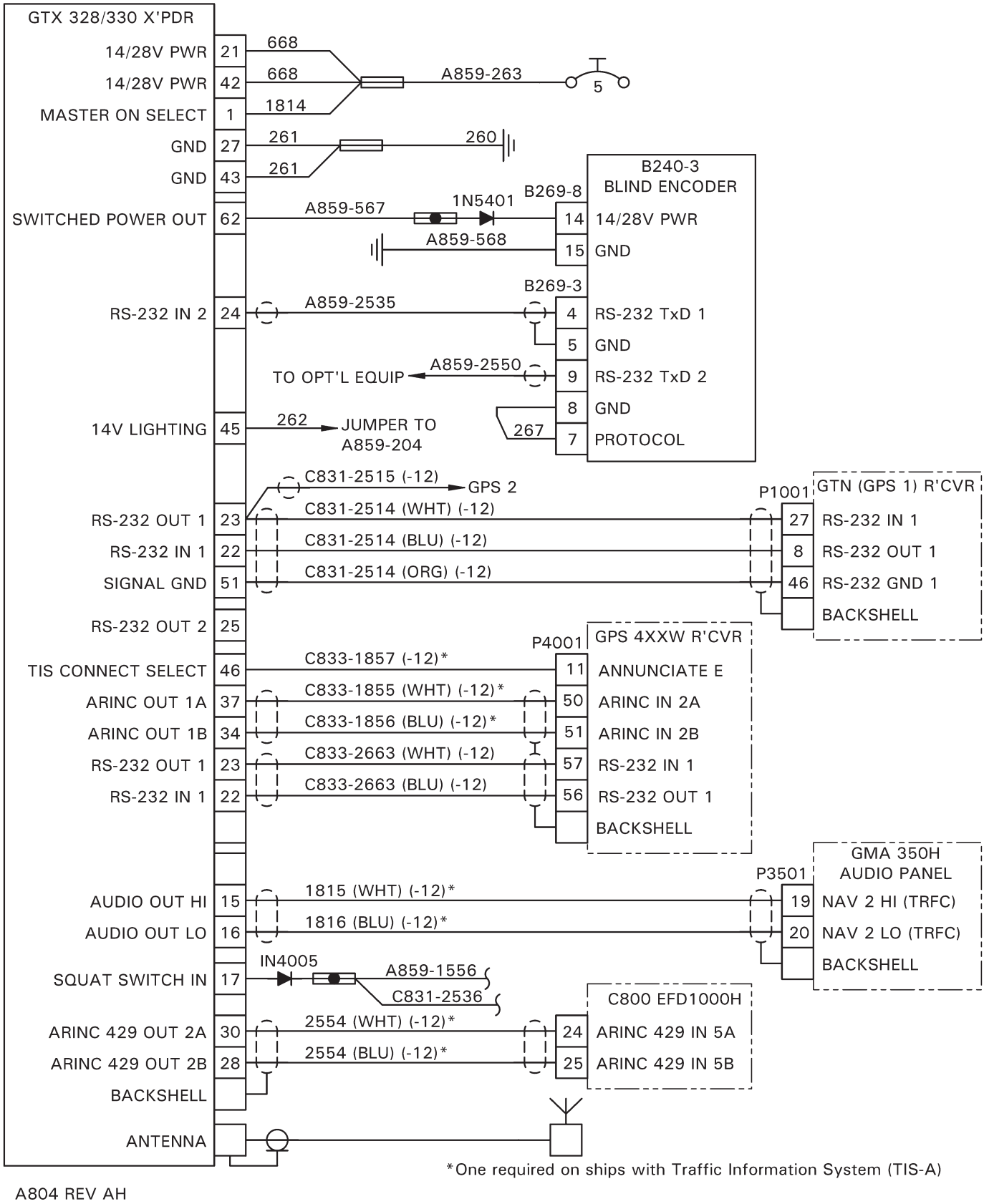

A804 REV AH

FIGURE 14-41 A804-12 & -13 TRANSPONDER SCHEMATIC (GARMIN GTX 330 ES)

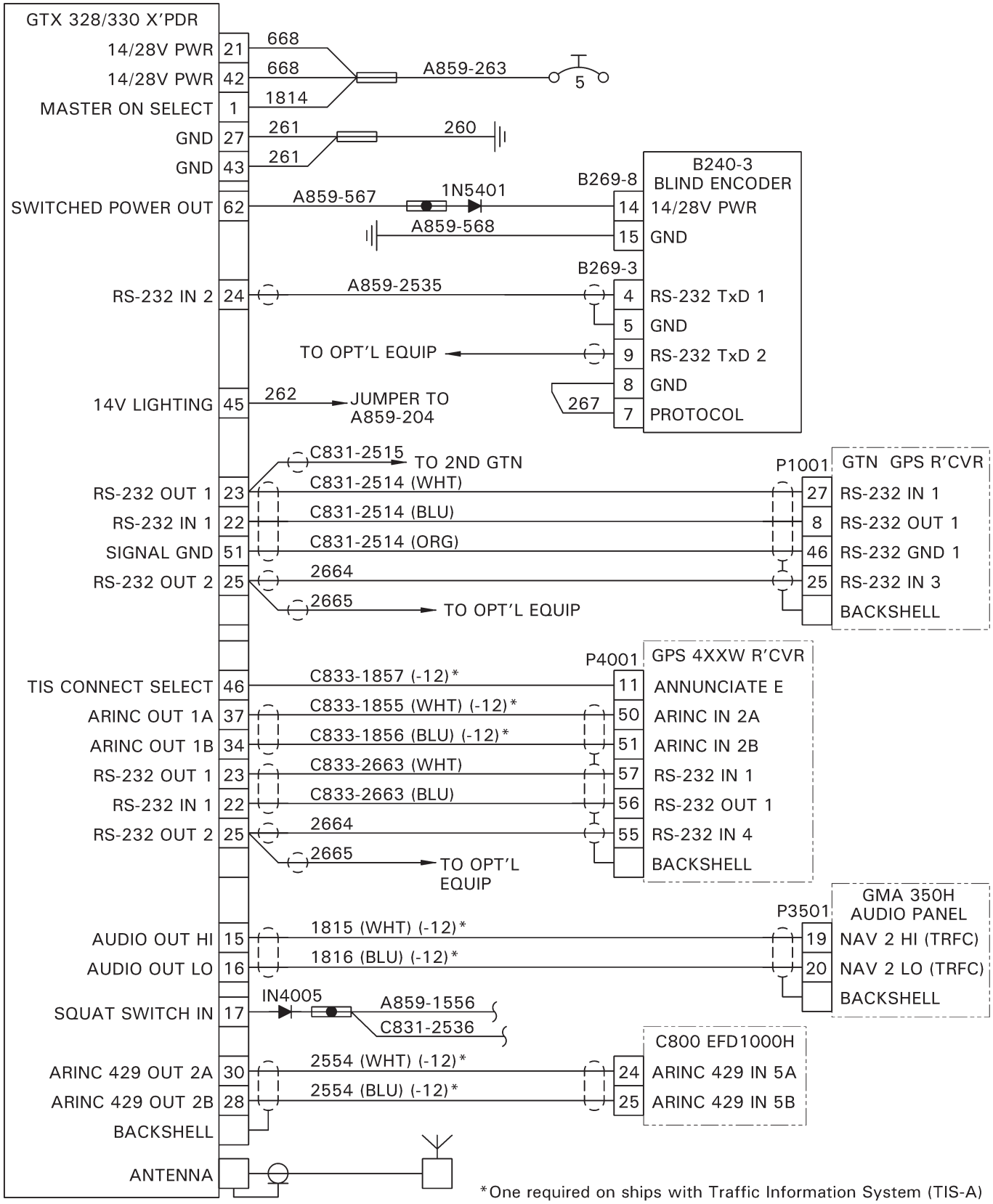

A804 REV AG

FIGURE 14-42 A804-12 & -13 TRANSPONDER SCHEMATIC (GARMIN GTX 330 ES; EARLIER SHIPS)

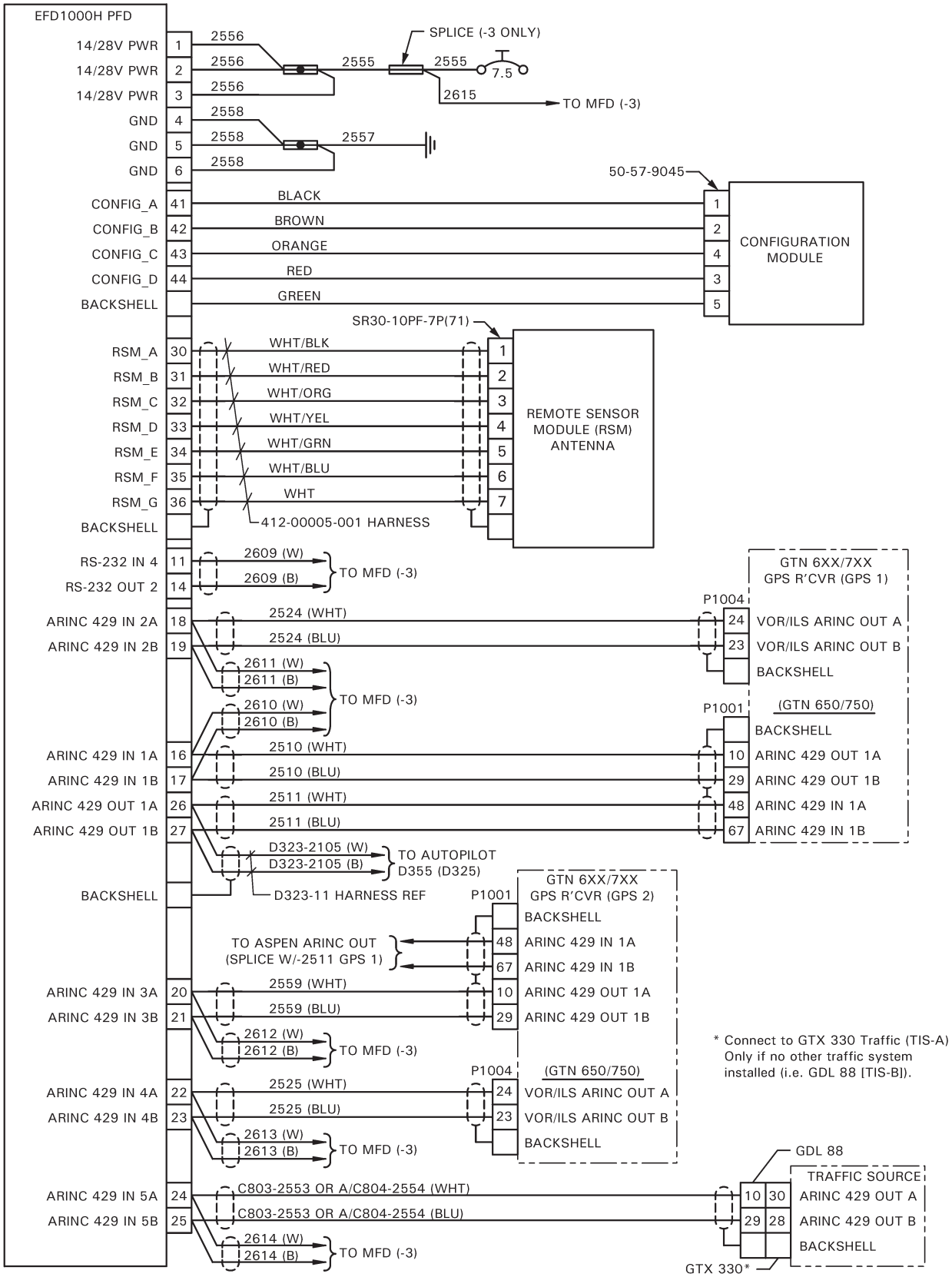

C800 REV D

FIGURE 14-43 C800-1 ASPEN PFD ELECTRICAL SCHEMATIC

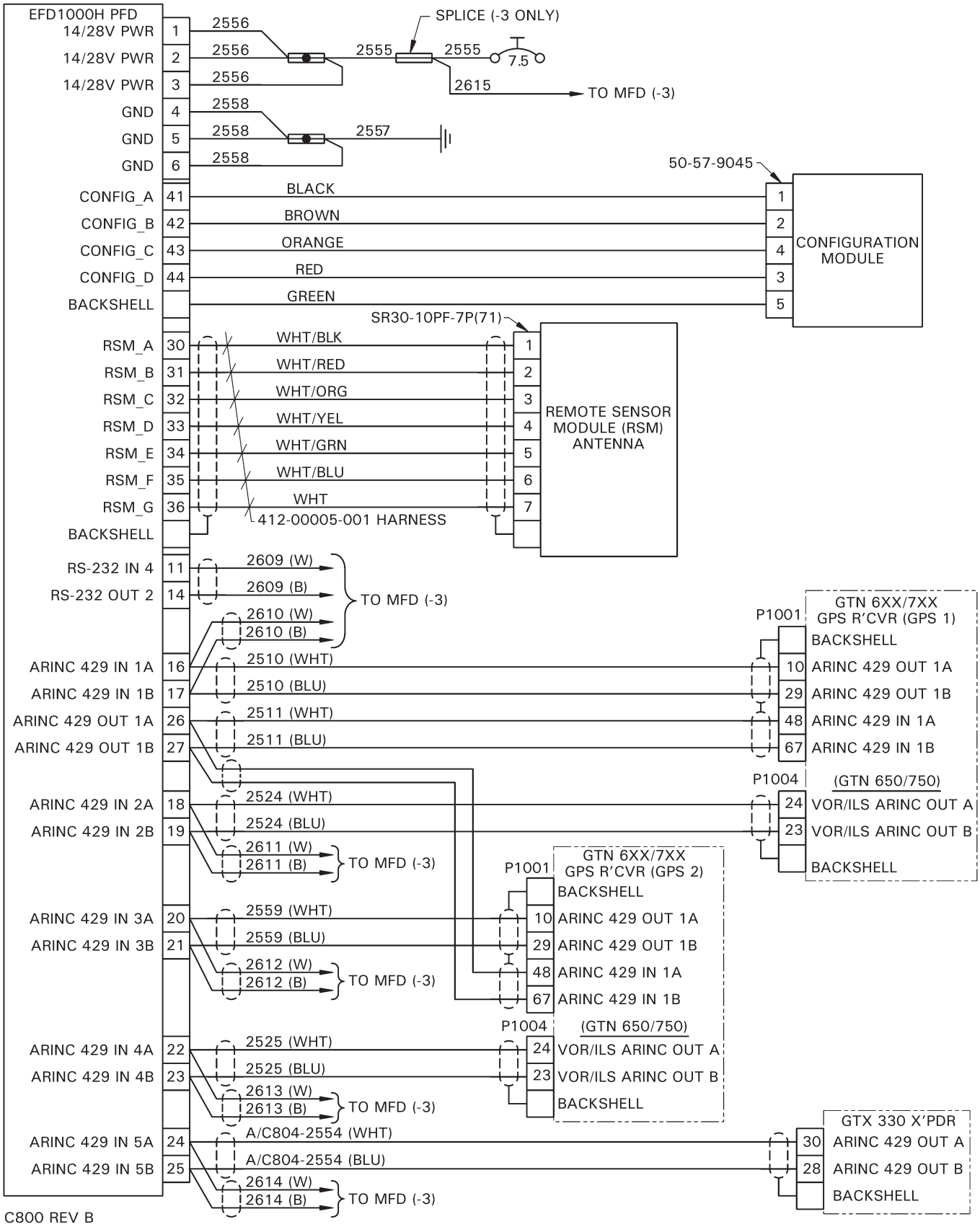

FIGURE 14-44 C800-1 ASPEN PFD ELECTRICAL SCHEMATIC (EARLIER SHIPS)

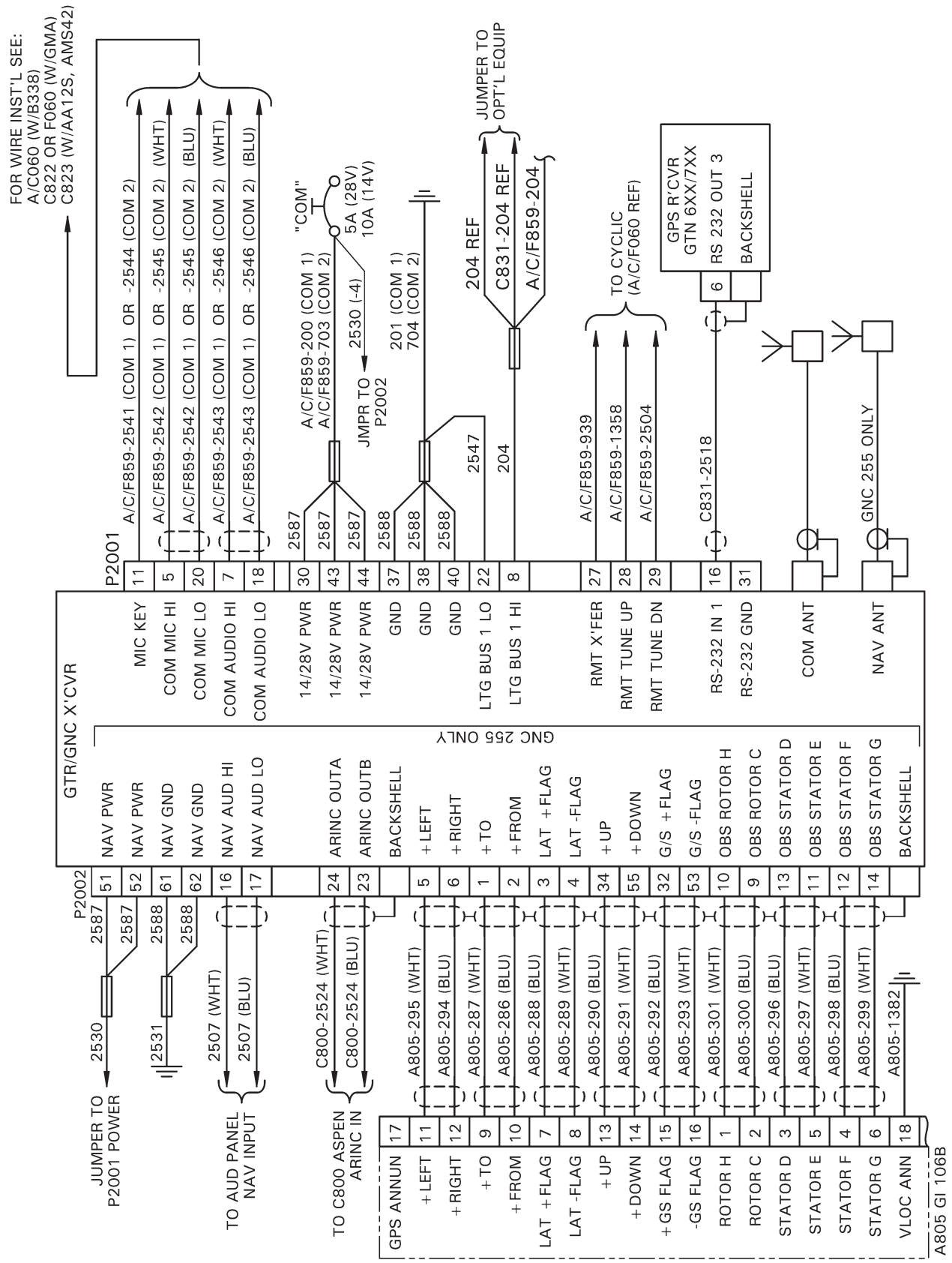

FIGURE 14-45 C802-2, -3, & -4 COM RADIO SCHEMATIC (GARMIN GTR/GNC 225B)

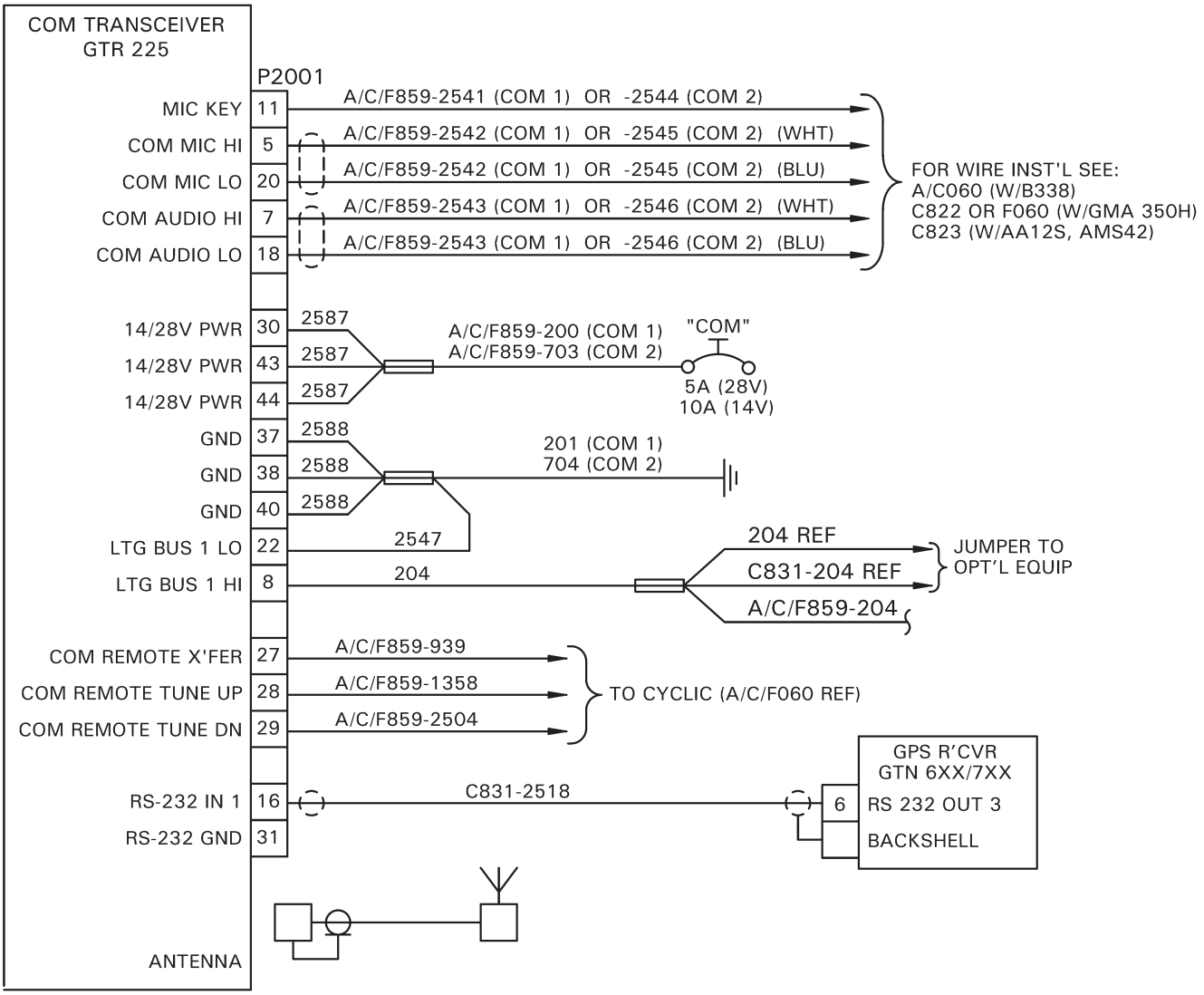

C802 REV D

FIGURE 14-46 C802-2 & -3 COM RADIO SCHEMATIC (GARMIN GTR 225B; EARLIER SHIPS)

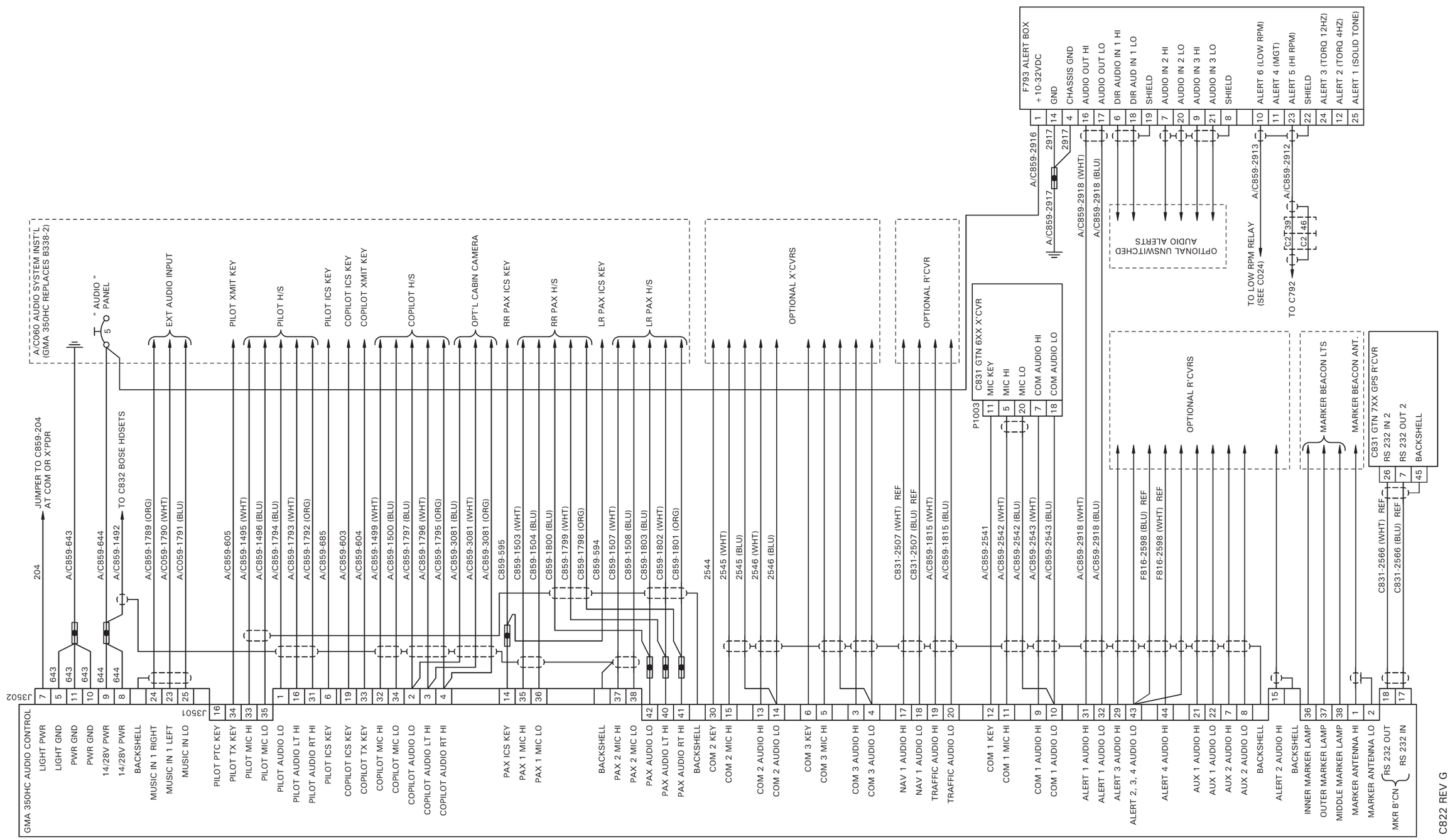

FIGURE 14-47 C822-1 AUDIO CONTROL SCHEMATIC (GARMIN GMA 350HC)

Intentionally Blank

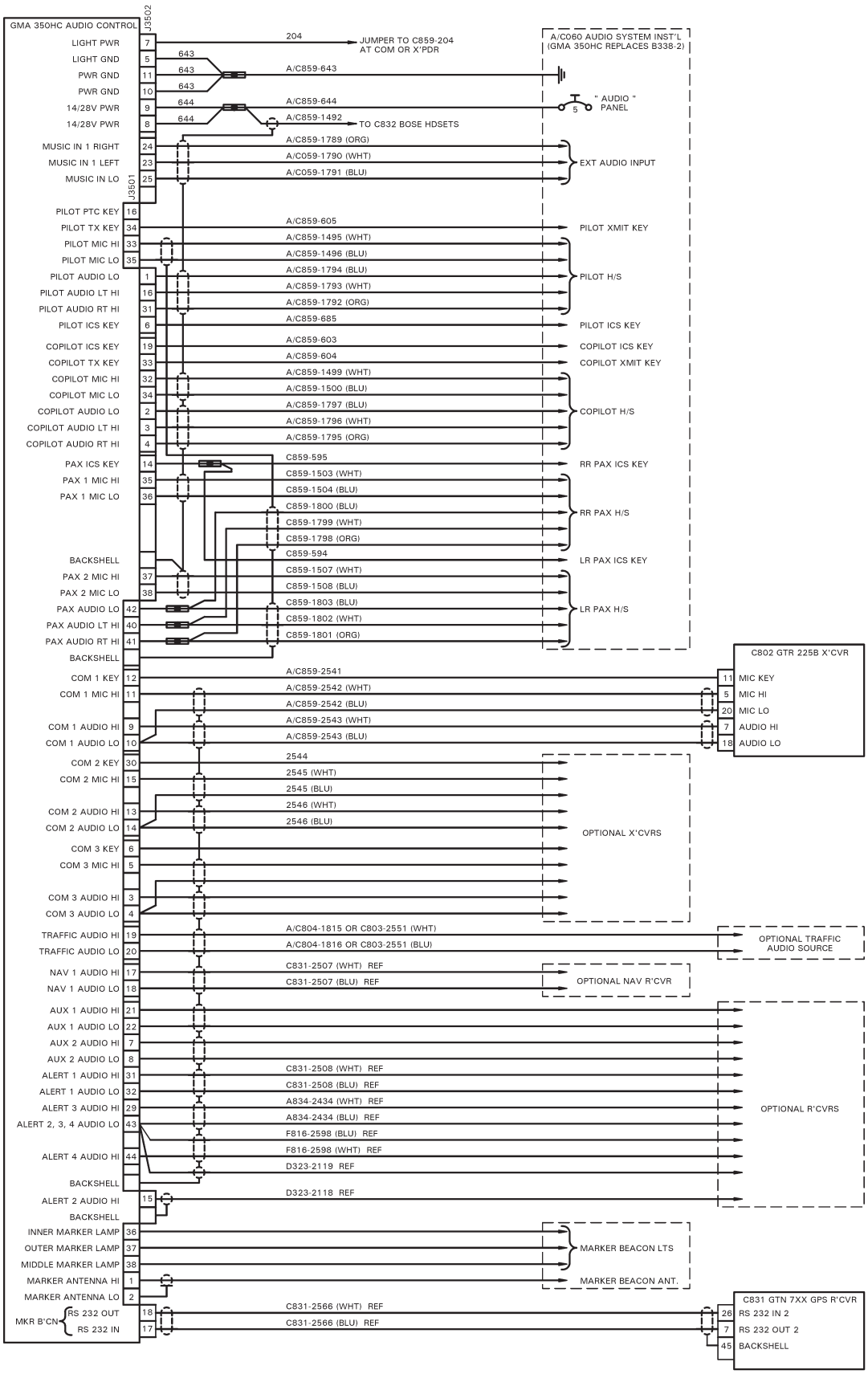

C822 REV D

FIGURE 14-48A C822-1 AUDIO CONTROL SCHEMATIC (GARMIN GMA 350HC)

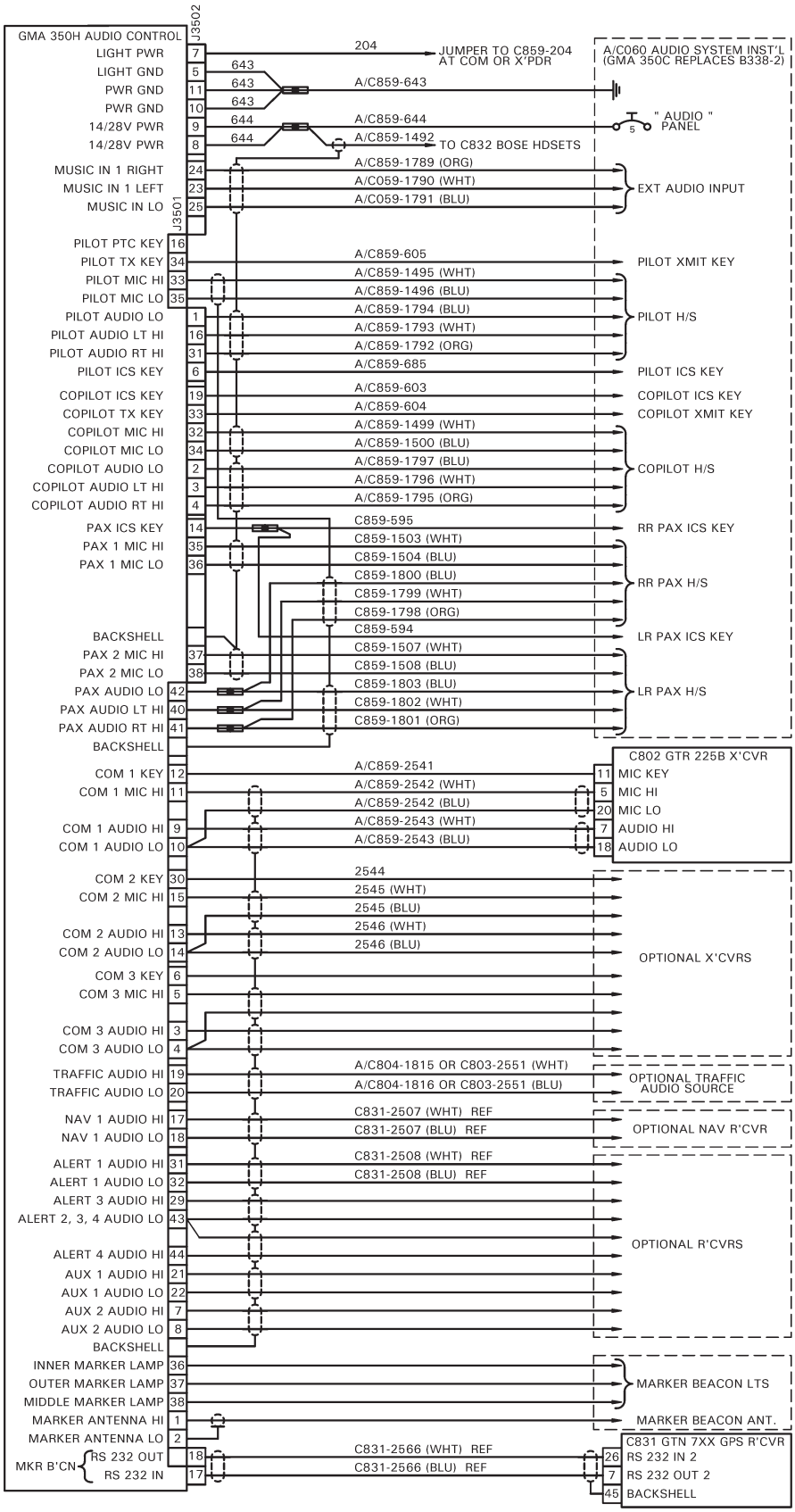

C822 REV C

FIGURE 14-48B C822-1 AUDIO CONTROL SCHEMATIC (GARMIN GMA 350H; EARLIER SHIPS)

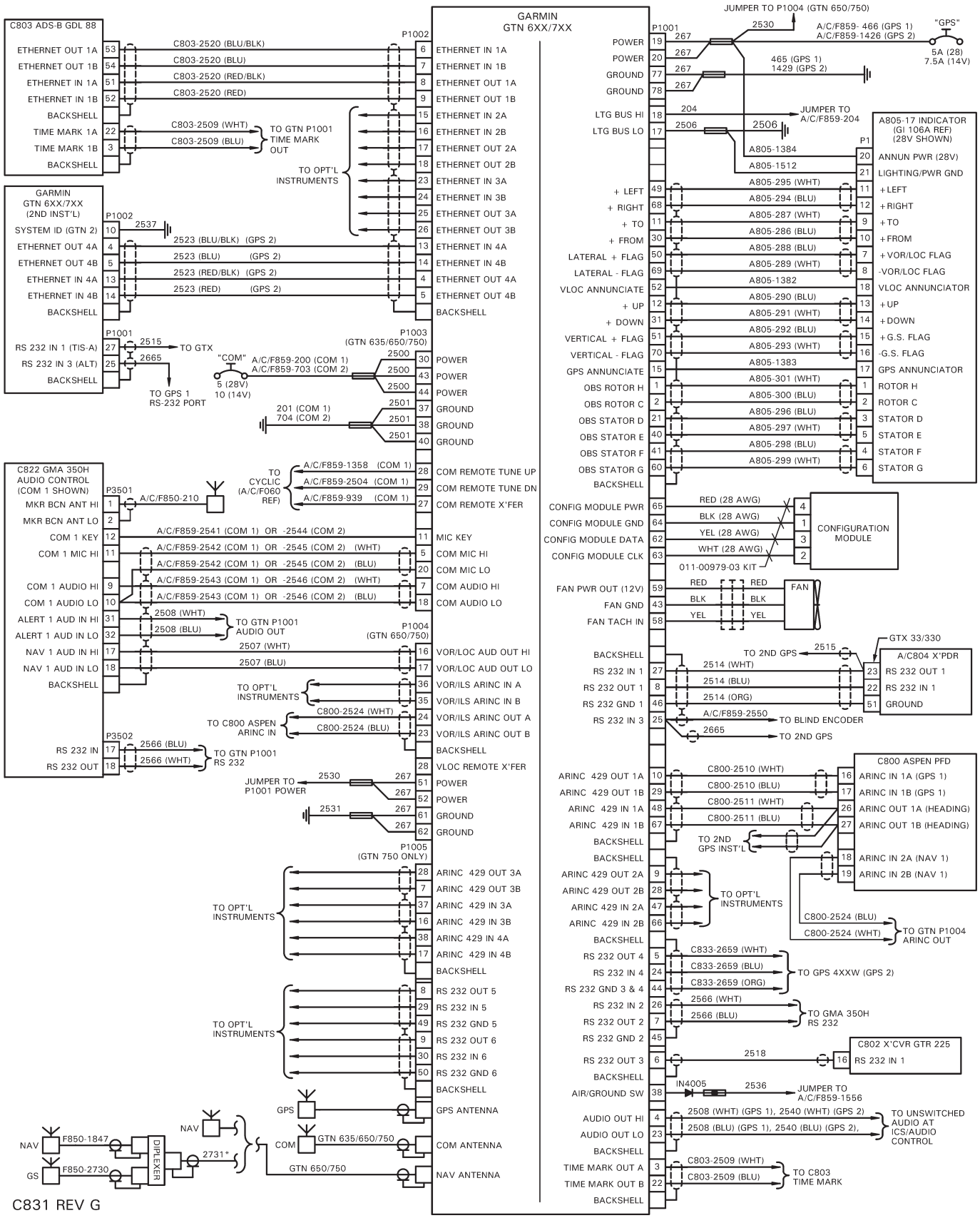

FIGURE 14-49 C831 GPS SCHEMATIC (GARMIN GTN 600 SERIES)

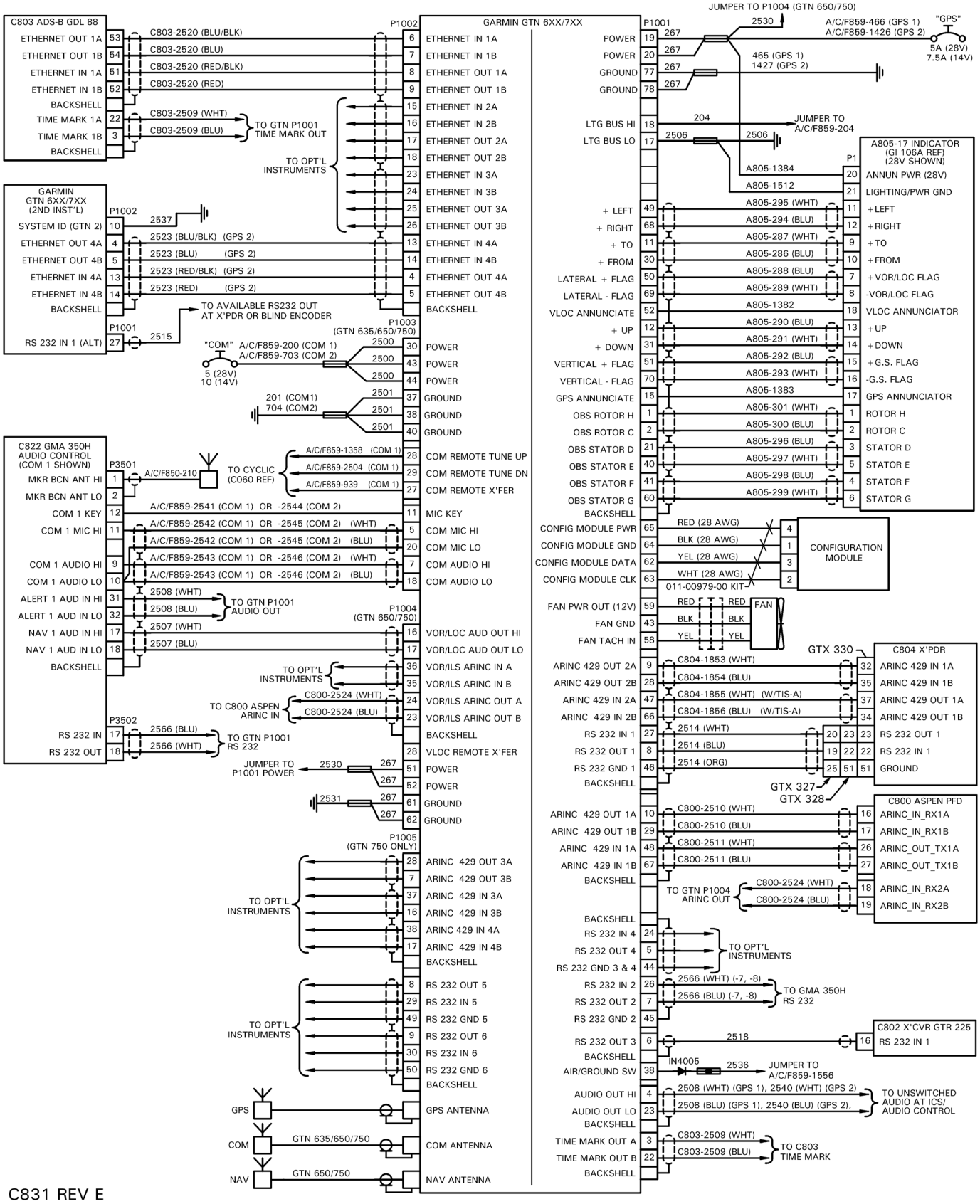

FIGURE 14-50 C831 GPS SCHEMATIC (GARMIN GTN 600 SERIES; EARLIER SHIPS)

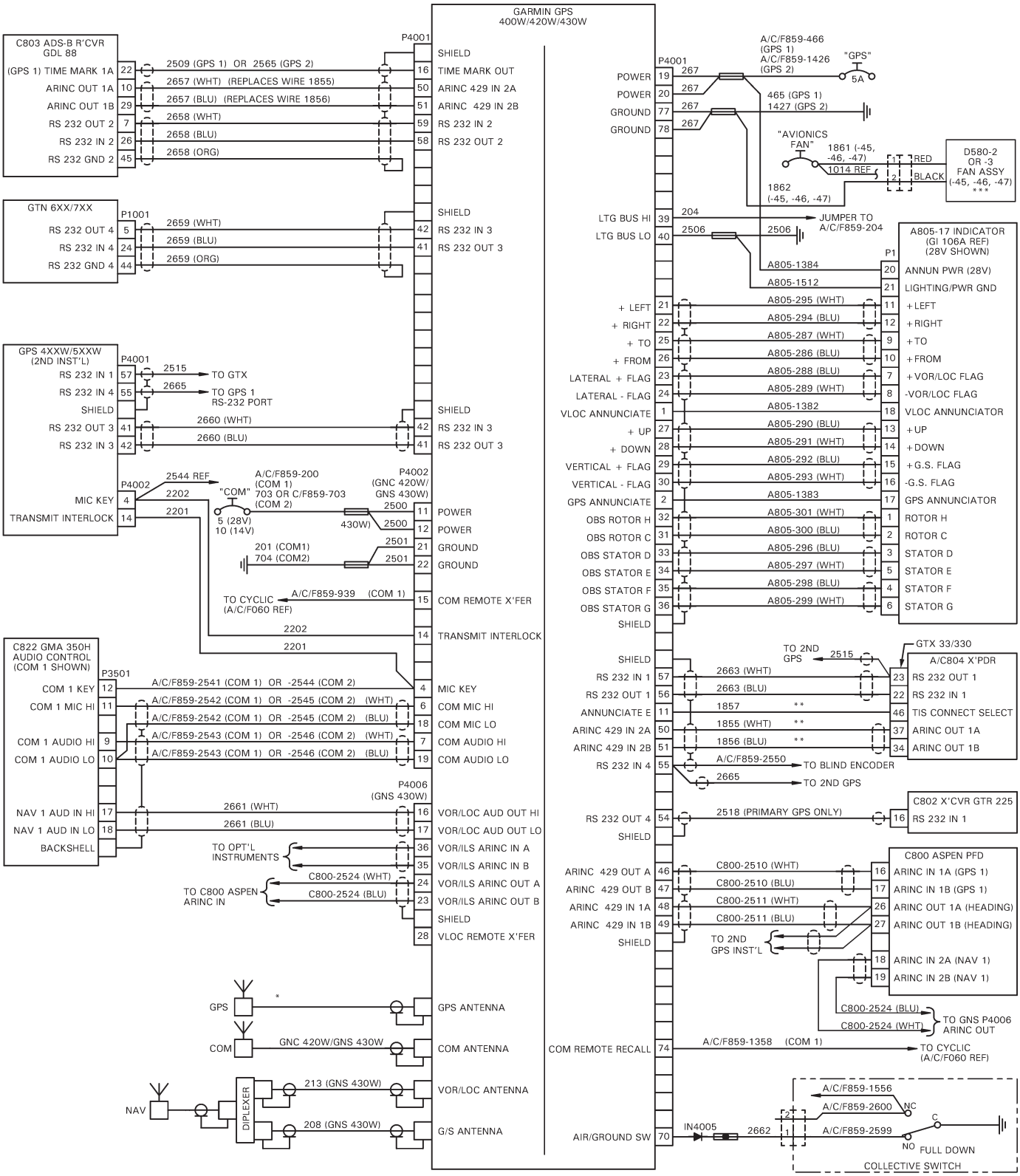

* Use C/F850-51 (upr AFT T/C pad) if ELT installed.
** Omit wires -1855, -1856, & -1857 if alternate traffic receiver/system installed (e.g GDL 88 ADS-B r'cvr).
*** Use D580-2 for 28V instl's & D580-3 for 14V instl's.

C833 REV T

FIGURE 14-51 C833 GPS SCHEMATIC (GARMIN 400 SERIES)

Intentionally Blank